Translated from Japanese to English - www.onlinedoctranslator.com

TAITO®

VEWLIX

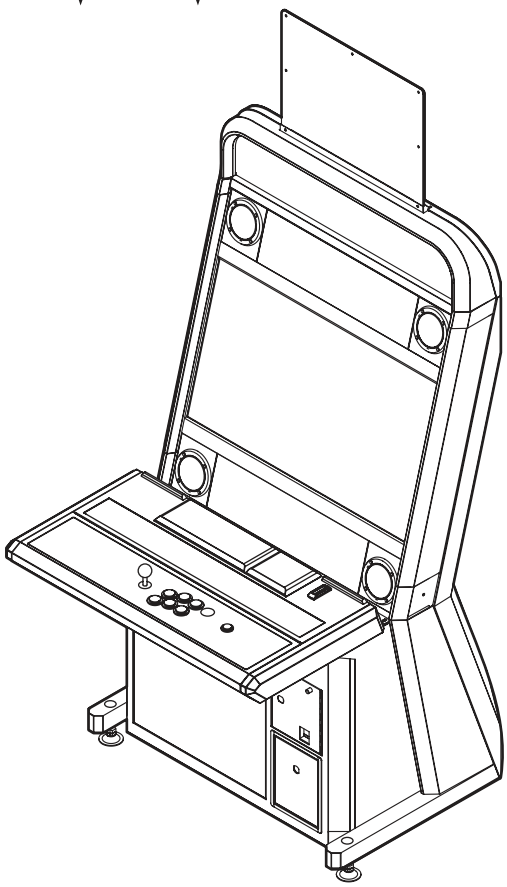

© TAITO CORPORATION 2010 ALL RIGHTS RESERVED.

Vewlix diamond

取扱説明書

⚠ caution

-For safe and correct use of this product, be sure to read and fully understand this manual before use.

- After reading this manual, be sure to keep it in the designated place so that you can use it at any time.

株式会社タイトー®

May be done.

G2003038A

HARD CANDY ハードキャンディ WWW.HARD-CANDY.COM

Introduction

This time, Taito Co., Ltd. commercial amusement equipment, Thank you for purchasing "Buurix Diamond".
Thank you.

Purpose and handling of the instruction manual

This manual describes the handling method and precautions for handling this machine correctly. Please read this manual carefully and keep it in a safe place so that you can refer to it at any time. If you lose this manual, please contact the "Contact Information" listed in the "Repair Information" at the end of this manual.

About this product

This product does not come with an I / O board. Please manage it by purchasing the necessary optional items separately according to the game board to be used.

Fully compatible with NESiCAxLive
This product is a general-purpose chassis optimized for our content download system NESiCAxLive.

ネシカ クロス ライブ
NESiCAxLive

It is a content download system that distributes past titles and classic titles for free, including new titles. By using the touch-type NESiCA (common card) and adding his points to the player, it contributes to the improvement of repeatability.

■ Inquiries about NESiCAxLive:

株式会社タイトー AM Sales Department: Shinjuku Bunka Quint Building 15F, 3-22-7 Yoyogi, Shibuya-ku, Tokyo 151-8648
East Japan Sales Section: tel.03-6361-8380 Fax.03-3378-8258 West Japan Sales Section: tel.06-6905-4553 Fax.06-6905-3049

Contact for inquiries regarding breakdowns and parts orders

For inquiries regarding malfunctions or ordering parts, refer to the serial number sticker (see "Name of each part" for the pasting position.) Please check the "Machine number" and contact our service department listed in the "Repair guide" at the end of the book.

HARD CANDY ハードキャンディ WWW.HARD-CANDY.COM

Important notice for safety

This document describes safety issues as follows: Please read it carefully before handling and be sure to follow the precautions.

table
Record
of
Theory
Ming

About the person used in our amusement equipment

The person and meaning of the operator used in the amusement machine instruction manual are as follows.

● Store maintenance man

Experienced in the maintenance of commercial amusement equipment, and under the supervision of the owner of the commercial amusement equipment or the store operator, on a daily basis, the installation, assembly, maintenance and inspection of the amusement equipment, parts and consumables A person who exchanges.

● Technician

Amusement equipment manufacturer who is involved in equipment design, manufacturing, inspection, and maintenance services, or has the same knowledge of electrical, electronic, and mechanical engineering as graduating from technical high school, and is engaged in daily maintenance and repair of amusement equipment. The person involved.

● Player

A person who plays a game at a facility or store where commercial amusement equipment is installed.

Explanation of safety notations

In this manual, the degree of danger and damage caused by incorrect handling is classified by the following indications.

If you ignore this indication and handle it incorrectly, it may result in death or serious injury.

It indicates the contents that may cause injury and the contents that may cause property damage if this indication is ignored and the product is handled improperly.

Indicates precautions for instructing actions during work.
It shows the contents that are expected.

Indicates prohibition (what you must not do).

HARD CANDY ハードキャンディ WWW.HARD-CANDY.COM

Handling precautions

⚠警告

● Do not use the product in an abnormal condition such as smoke, strange odor or abnormal noise.
It may cause electric shock or fire.
Immediately turn off the power switch, unplug the power plug from the outlet, and consult your dealer or our service department.

● The power capacity of this unit is AC100V and the maximum current consumption is 2.7A. Use indoor wiring that matches the power supply specifications as it may cause electric shock or fire.

● Do not insert or remove the power plug with wet hands. It may cause electric shock.

● Do not use a damaged power cord.
It may cause electric shock or fire. Observe the following points when handling the power cord. ・ Do not process the power cord
・ Do not put heavy objects on the power cord.
・ Do not bend or pull forcibly

● The accessory power cord is for this unit only.
Observe the following points when using the power cord. -Do not use the supplied power cord for other devices or applications.

● Do not wire the power cord by ridge. It will generate heat and cause a fire.

● Be careful when handling the power plug.
Mishandling may cause a fire.
Observe the following points when handling the power plug. ・ Do not insert the power plug with foreign matter such as dust attached. ・ Insert the power plug securely to the root.

● If liquid such as foreign matter or water gets inside, do not use it as it is. It may cause electric shock or fire.
Immediately turn off the power switch, unplug the power plug from the outlet, and consult your dealer or our service department.

● Caution due to fire (cigarette)
A fire alarm is not attached to this machine, so be careful not to let cigarette butts touch the machine.

● Please use only in Japan.
This product is designed and manufactured for use in Japan. If it is used outside Japan, it may violate the laws and regulations of the country concerned, so it cannot be used outside Japan.

HARD CANDY ハード キャンディ WWW.HARD--CANDY.COM

About warning labels

caveat

- Be careful of the lighting and dirt at the installation site so that the warning label affixed to the machine can be read sufficiently. Also, do not hide it with other game consoles.
- If the warning label becomes extremely dirty or damaged, replace it with a new label.
  (Contact for inquiries regarding warning labels → end of book)

[] Is the part number.

- **Warning label pasting position**

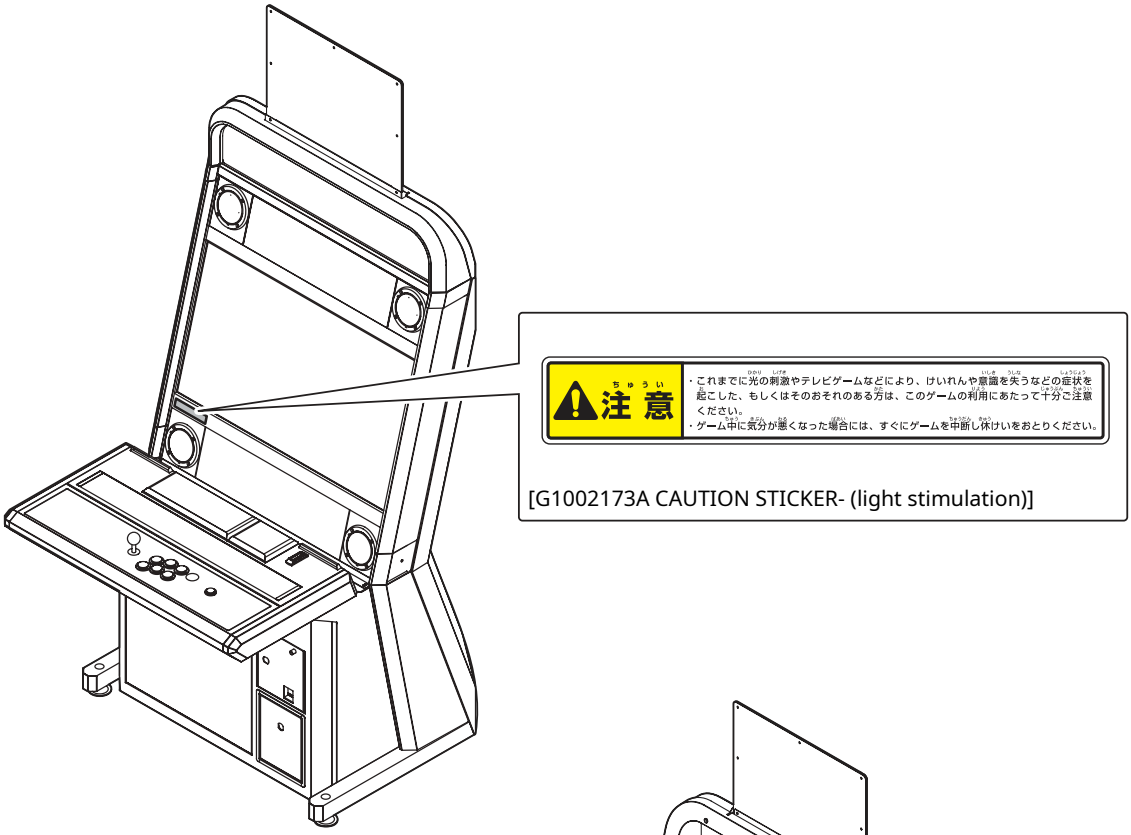

[G1002173A CAUTION STICKER- (light stimulation)]

[G1002088A VOLTAGE WARNING STICKER]

Introduction _____ **1**

Purpose and handling of the instruction manual 1
Inquiries regarding breakdowns and parts orders 1

Important notice for safety

About the person used in our amusement equipment 2
Explanation of safety notation 2
Handling Precautions 3
About warning labels .....Four

Table of contents _____ **5**

Product Overview _____ **6**

Names of each part 6
Product specification list 7
External dimensions..... ..7
Carry-in form 8
List of accessories 9
About various service keys .....Ten

Chapter 1 Transportation _____ **11**

1-1. Moving the housing (moving the floor) 11
1-2. Carrying the housing 13
1-3. Re-transportation method 14
1-4. How to load the vehicle 15

Chapter 2 Installation _____ **16**

2-1. Installation 16
2-2. Installation of housing 18
2-2-1 Fixing the housing 18
2-2-2 Assembling the control panel assembly 19
2-2-3 Installation of instruction panel .....twenty three
2-3. Installing the game board .....twenty four
2-3-1 Preparation before installation .....twenty four
2-3-2 Installation of TAITO Type X .....twenty five
2-3-3 Installation of TAITO Type X2 27
2-4. Power plug connection 29
2-5. Communication cable 30

Chapter 3 Operation _____ **31**

3-1. Operation check 32
3-2. Function explanation 33
3-3. About service outlets 34
3-4. Replacement of instruction sheet 35
3-5. Pasting the instruction sticker sheet 35
3-6. Replacing the display sticker 36

Chapter 4 Maintenance _____ **37**

4-1. Inspection 38
4-2. Cleaning 39 39
4-3. Optional items 40
4-4. How to remove and replace parts 44
4-5. Adjusting the LCD monitor 54
4-6. Rotation of LCD monitor 56
4-7. Fixing the control panel assembly 65
4-8. Simple troubles and countermeasures 67

Chapter 5 Disposal _____ **68**

5-1. Disposal 68
5-2. Main component material table 69

Parts Catalog _____ **73**

_____**107**

_____ **110**

HARD CANDY ハードキャンディ WWW.HARD-CANDY.COM

Product Summary

Name of each part

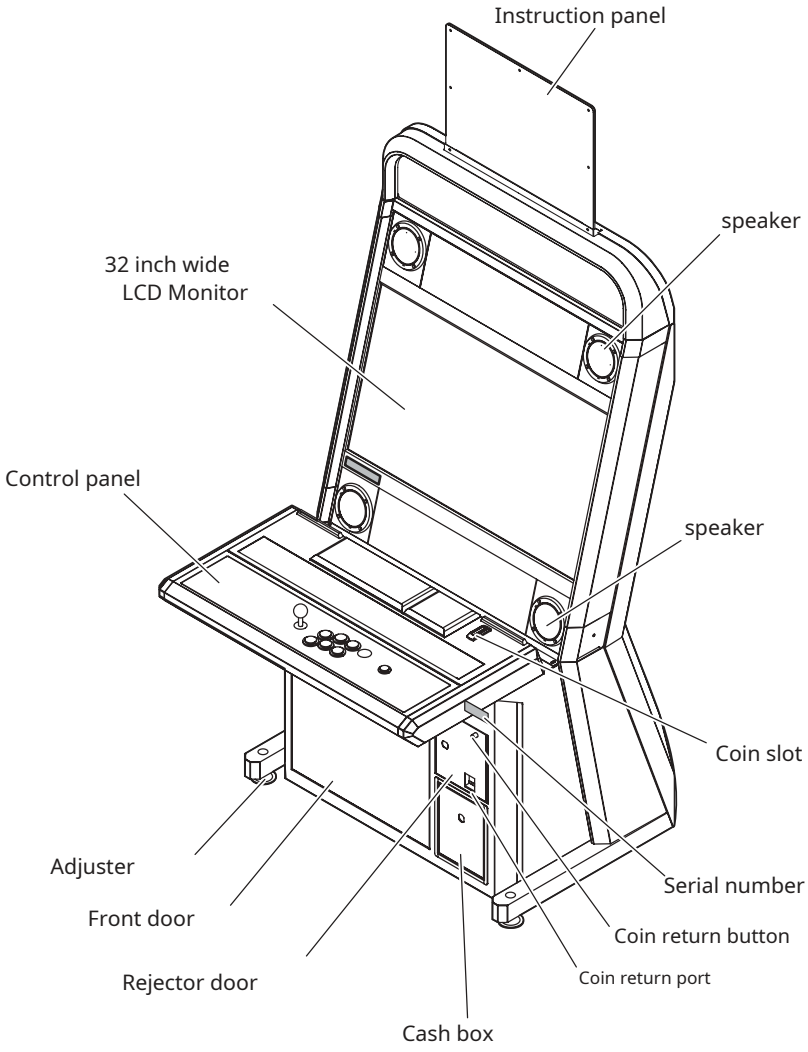

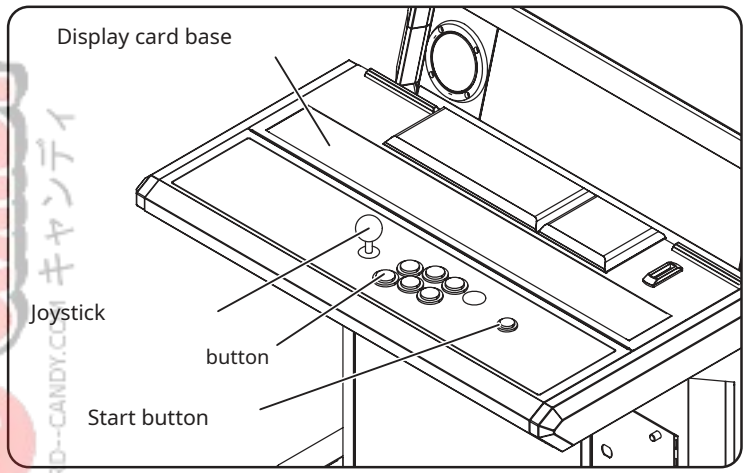

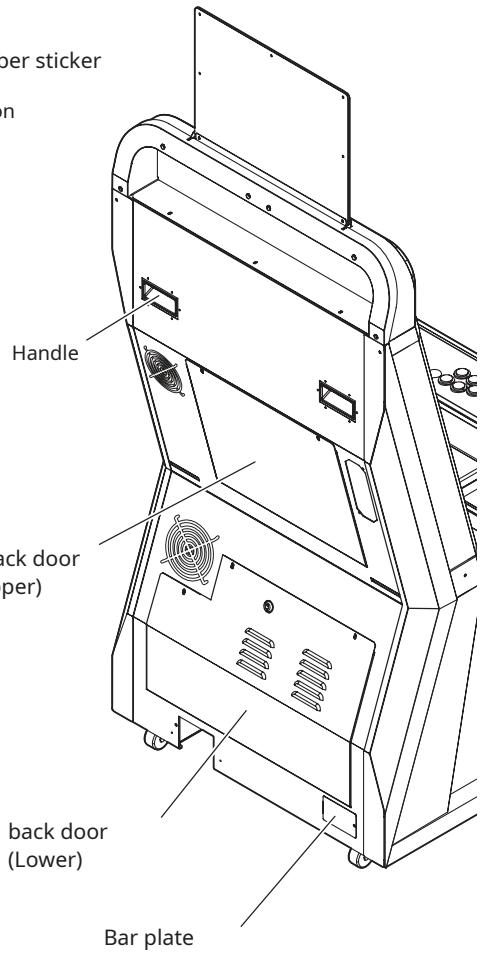

HARD CANDY
WWW.HARD-CANDY.CO.JP ハードキャンディ

Product specification list

Housing specifications	
Item	Specification data
External dimensions (including instruction panel)	800 (width) x 800 (depth) x 1,890 (height) mm
External dimensions (at the time of delivery)	800 (width) x 525 (depth) x 1,575 (height) mm
Total mass	About 105kg
Power supply	AC100V (50 / 60Hz)
Rated power consumption	230W* 1
Maximum current consumption	2.7A* 1
monitor	32-inch wide LCD monitor
Control panel	1 joystick, 6 buttons (1J7B)
Coin slot	100 yen coin slot

*1 The rated power consumption and maximum current consumption values are the values when NESiCAxLive is installed.

● Depending on the game board, it may not be possible to display properly on the Burix diamond. In order to display normally, it is necessary to keep the game board and, in some cases, customize and adjust it for a fee. note that.

● This machine does not come with an I / O board. Please purchase the necessary optional items separately according to the game board to be used.

External dimensions

● **At the time of installation**

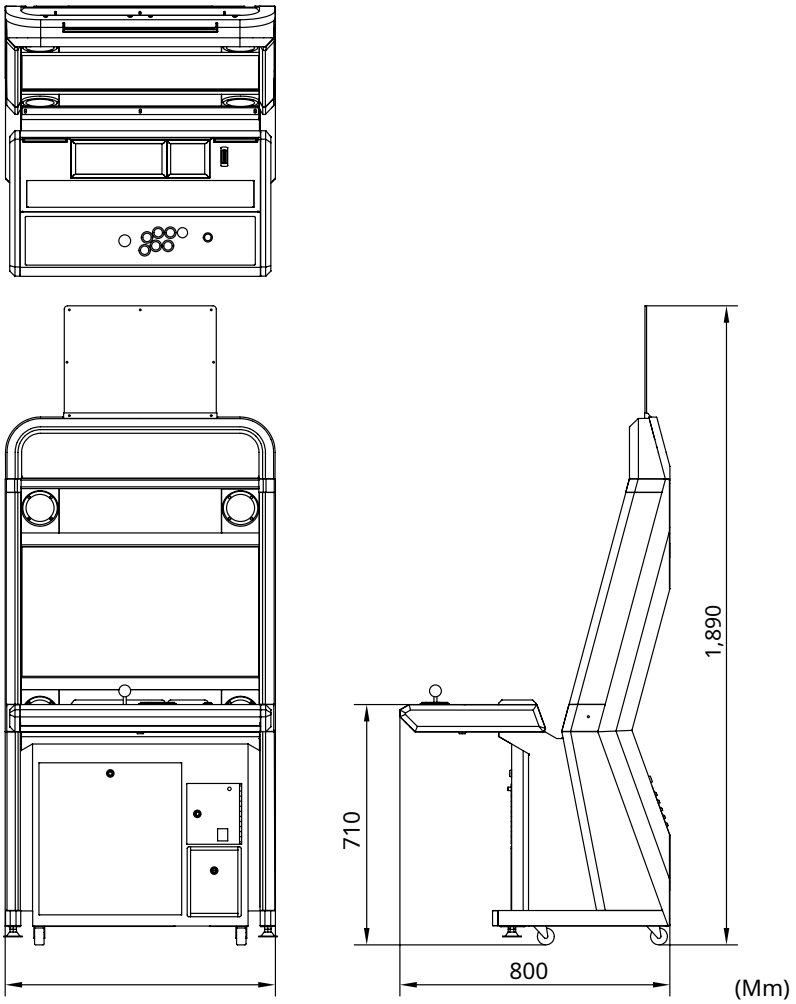

● At the time of delivery

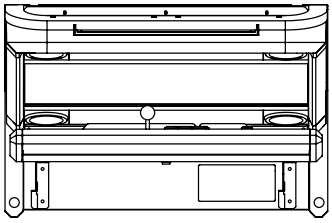

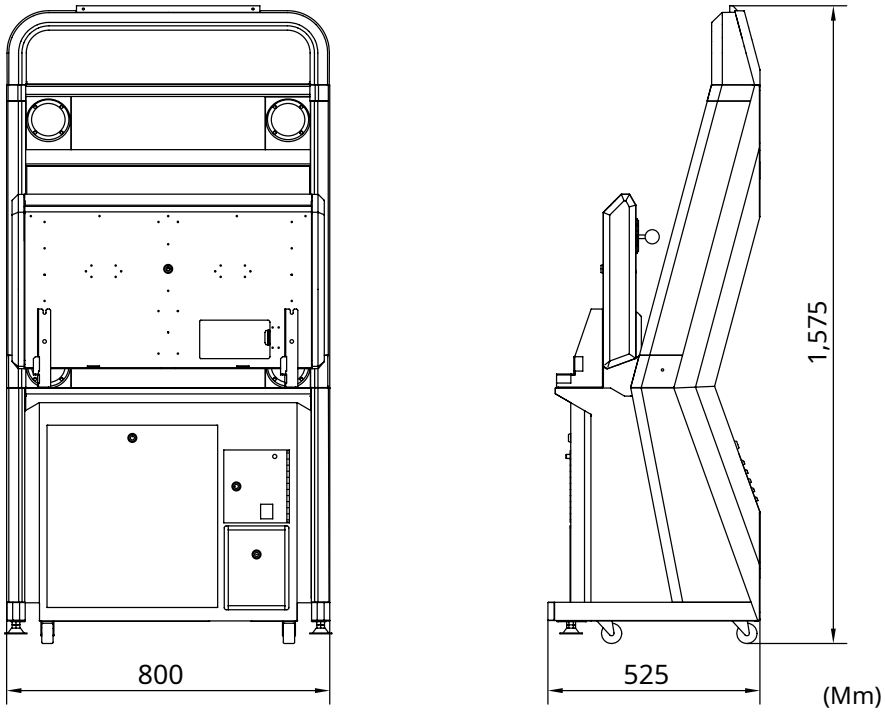

Carry-in form

Dispose of the packaging materials that are no longer needed by a sorting method that suits the area.

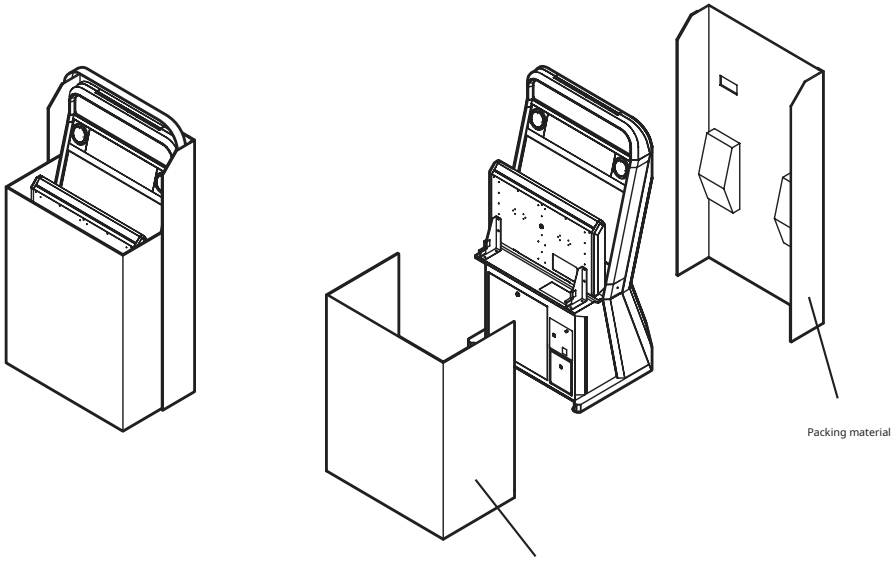

List of accessories

Make sure you have all the accessories before installation. If you are missing any accessories, please contact the "Contact Information" listed at the end of the book.

Name [Part number]	remarks	Number of deliveries
Power cord [C07 00359P]	Stored in a cash box	1
Nylon clamp	Stored in a cash box * For fixing the power cord	1
Nylon clamp fixing screw ・ Truss screw (trivalent B): M4X8	Stored in a cash box * For fixing nylon clamps	1
Hole plug [F90 08264A]	Stored in a cash box * Adjuster hole for blindfolding	2
instruction manual [G20 03038A]	Put it in a bag and paste it on this machine	1
Instruction panel 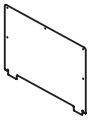	Paste on LCD monitor	1
AC joint harness [L90 06500A]	Stored in a cash box * When setting the LCD monitor to a vertical screen use	1

■ Parts for connecting game boards

Name [Part number]	remarks	Number of deliveries
Audio cable * Used for JVS compatible game boards	Stored in a cash box	1
Audio cable * Our products TAITO Type X and TAITO Type X2 Used when assembling NESiCAxLive	Stored in a cash box	1
Semis screw (W) (trivalent W): M4X18 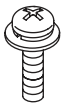	Stored in a cash box	Four

* This product does not come with a game board or I / O board.

HARD CANDY ハードキャンディ WWW.HARD-CANDY.COM

■ Various control panel mounting parts

Name [Part number]	remarks	Number of deliveries
Carriage bolt (chrome): M4X16 * For fixing EG3 / other companies' control panels 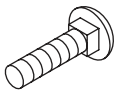	Stored in a cash box (EG3 = our product Eaglet 3)	6
Button cover (D = 30) [F9001053A] 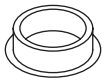	Stored in a cash box * Push button for blindfold	Four
Control plate cover L (SG) [E31 03016A] * Blindfold plate for mounting other companies' control panels 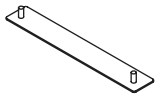	Stored in a cash box	1
Control plate cover R (SG) [E31 03017A] * Blindfold plate for mounting other companies' control panels 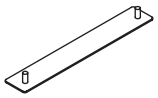	Stored in a cash box	1
Control plate cover L (EG3) [E31 03014A] * Blindfold plate for mounting our control panel 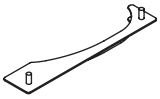	Stored in a cash box (EG3 = our product Eaglet 3)	1
Control plate cover R (EG3) [E31 03015A] * Blindfold plate for mounting our control panel 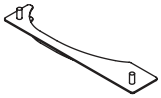	Stored in a cash box (EG3 = our product Eaglet 3)	1
Locknut (U) (Trivalent W): M4 * For fixing EG3 and other companies' control panels	Stored in a cash box (EG3 = our product Eaglet 3)	8
S PANEL HARNESS [L40 00169C] * For connecting other companies' control panels 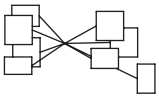	Stored in a cash box	1
Instruction sticker Sheet (remainder) 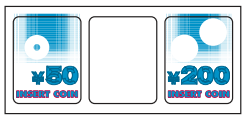	Stored in a cash box	1

About various service keys

If you lose your service key, please contact the "Contact Information" at the end of the book.

■ Service key: LY-1153

It is a key for locking the ejector door, front door, and back door (lower).

■ Cash key

It is a key for locking the cash box.

Service key (LY-1153) 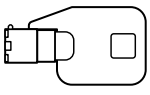		2 pieces
Cash key 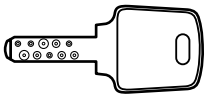		2 pieces

■ 1-1. Moving the housing (moving the floor)

caution

- Store the power cord inside the housing before moving it.
- Please raise the adjusters (2 places) to the maximum before moving.

1 Open the ejector door, turn off the power switch, and unplug the power plug from the outlet.

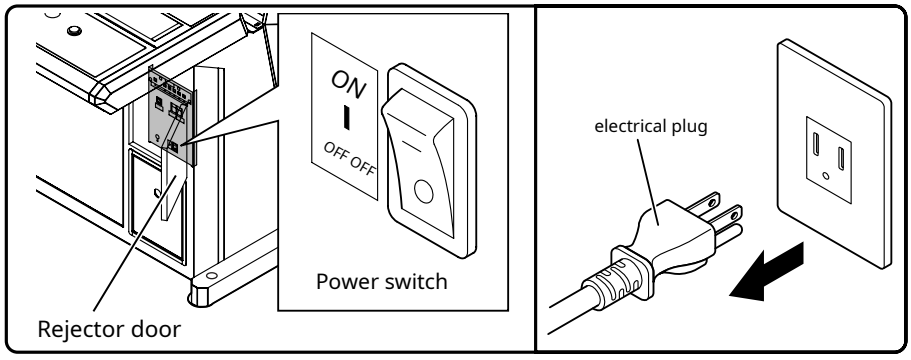

2 Remove the fixing screws (3 places) on the back door (lower). Unlock with the service key, open the back door (lower), and store the power cord inside. [Trust screw (chrome): M4x8] 3 places

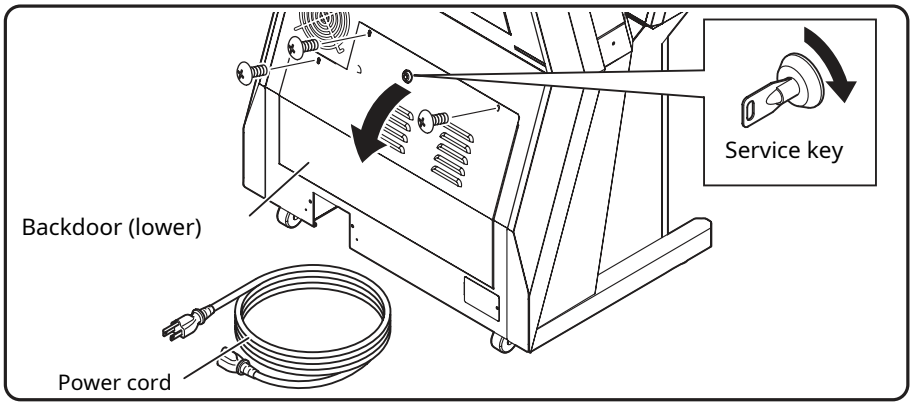

3 Before moving, raise the adjusters (2 places) with a monkey wrench etc., and the hole plugs (2 places) will be lifted and removed. Then raise the adjuster to the maximum.

* Be careful not to lose the removed hole plug.

重　要

Give an adjuster
Then the hole plug comes off
increase. Removed hole
Don't lose the plug
Please note.

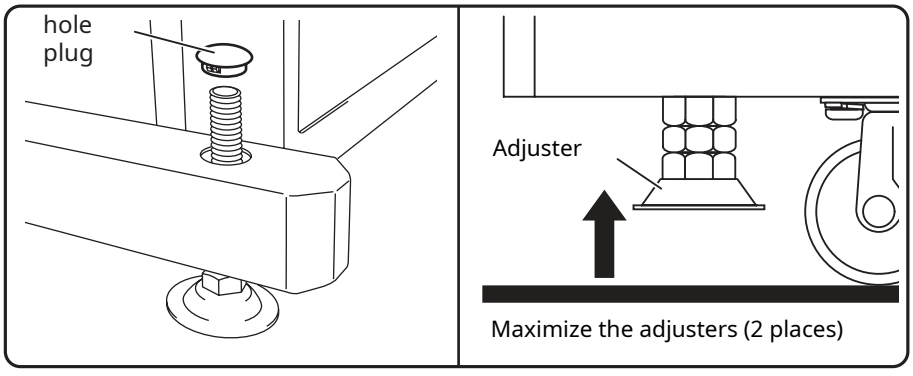

HARD CANDY ハード キャンディ WWW.HARD-CANDY.COM

4 Support the housing with both hands and push or pull at walking speed. You can also move it by holding the handle.

● **Direction of movement from the front side**

Slowly with both hands
Please press.

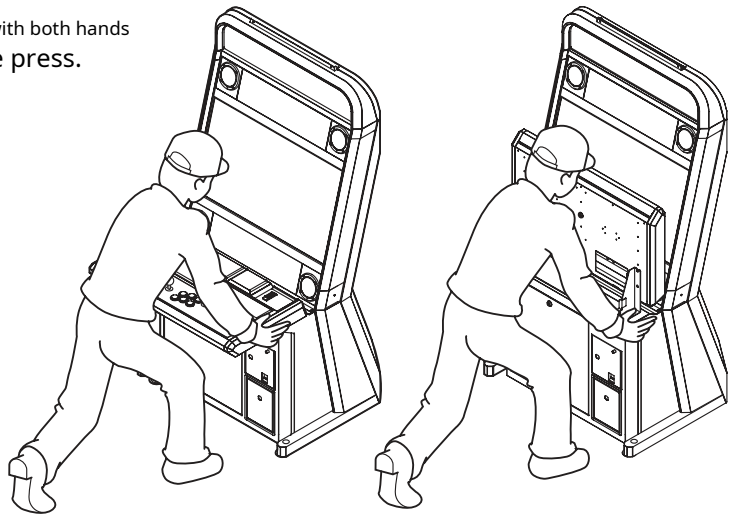

● **Direction of movement from the back side**

Slowly with both hands
Please press.

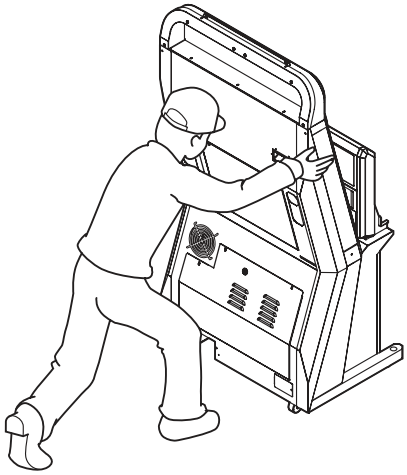

HARD CANDY ハードキャンディ WWW.HARD-CANDY.COM

■ 1-2. Carrying the housing

caveat

- When carrying this machine (approx. 105 kg), be sure to carry the back with 5 or more people. Even if 5 or more people carry it, the balance may be lost due to floor conditions, etc., resulting in an accident or injury. Therefore, please work carefully.
- When carrying, never hold the resin part or control panel.
- This machine cannot be transported by forklift. Do not carry it with a forklift as it may cause an unexpected accident such as a fall.

■ Places you can't have

When carrying, do not hold the resin part or control panel.

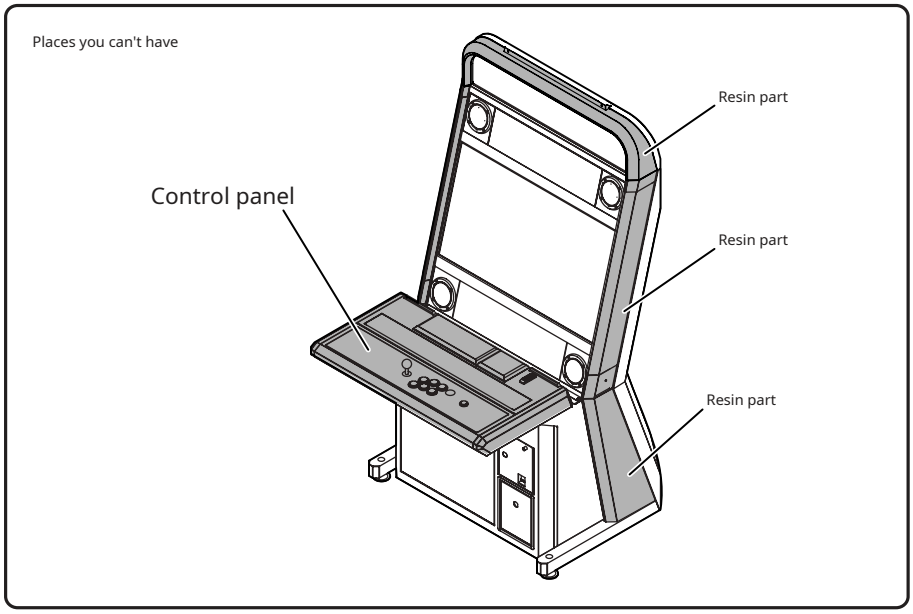

■ Where you can have

Remove the instruction panel, hold the support position on the back with 5 or more people, and carry it slowly.

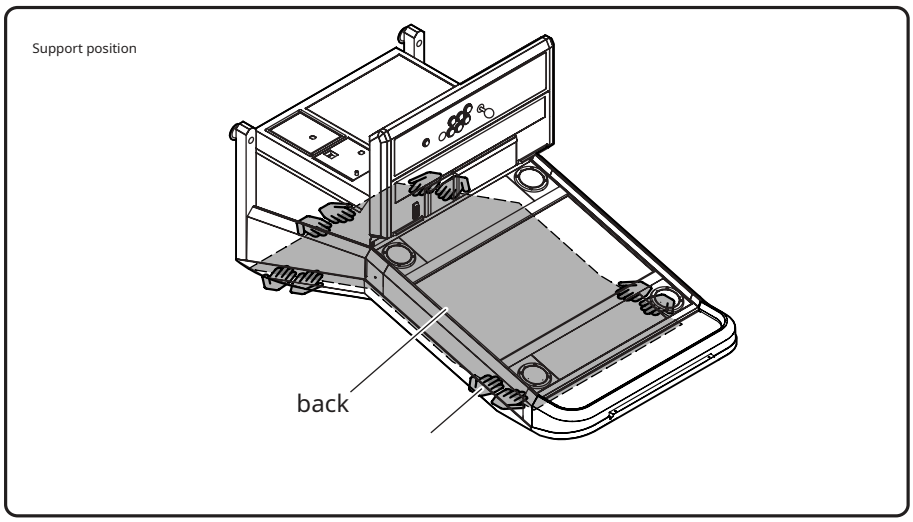

HARD CANDY ハードキャンディ WWW.HARD-CANDY.COM

■ 1-3. Re-transportation method

caveat

This machine cannot be transported by forklift.
Do not carry it with a forklift as it may cause an unexpected accident such as a fall.

caution

● Be sure to attach accessories and instruction manuals before re-transporting.

● Remove the game board before re-transporting.

● Before re-transporting, fix the control panel vertically with the shipping shipping bracket.

1. Open the ejector door, turn off the power switch, and open the back door (lower).
2. Unplug the power plug from the outlet.
   Bundle the cords and store them inside the back door (lower).
3. Open the front door and remove the game board.
4. Remove the control panel.
   Install the control panel vertically using the shipping shipping bracket. [■ 4-7 Fixing the control panel assembly] → See page 65
5. Remove the instruction panel and return all accessories, such as the instruction manual, to their original storage location.
6. Make sure all keys are locked.
7. When moving the housing, raise the adjusters (2 places) with a monkey wrench, remove the hole plugs (2 places), and raise the adjusters (2 places) to the maximum.

   * Please keep the removed hole plug in a safe place so as not to lose it.

HARD CANDY ハードキャンディ WWW.HARD-CANDY.COM

■ 1-4. How to load the vehicle

caveat

This machine cannot be transported by forklift.
Do not carry it with a forklift as it may cause an unexpected accident such as a fall. ..

caution

- On the vehicle, lower the adjusters (2 places) of the housing and fix them firmly.
- Hang the rope on the shipping brackets (2 places).
- If the housing and rope come into contact with each other, use a cardboard box or the like to apply a pad. If you carry it without a pad, it may be damaged.
- Rope hanging is prohibited on the resin part.

1. [1-3. Re-transportation method → P14]Please refer to and prepare for re-transportation.
2. [1-1. Moving the housing (moving the floor) → P11]Refer to and move to the vehicle where you want to load the enclosure.
3. Load it on the vehicle and lower and fix all adjusters.
4. Hang a rope on the shipping bracket to fix it. Use cardboard or the like to cover the part where the rope comes into contact with the housing. Rope hanging is prohibited on the resin part.

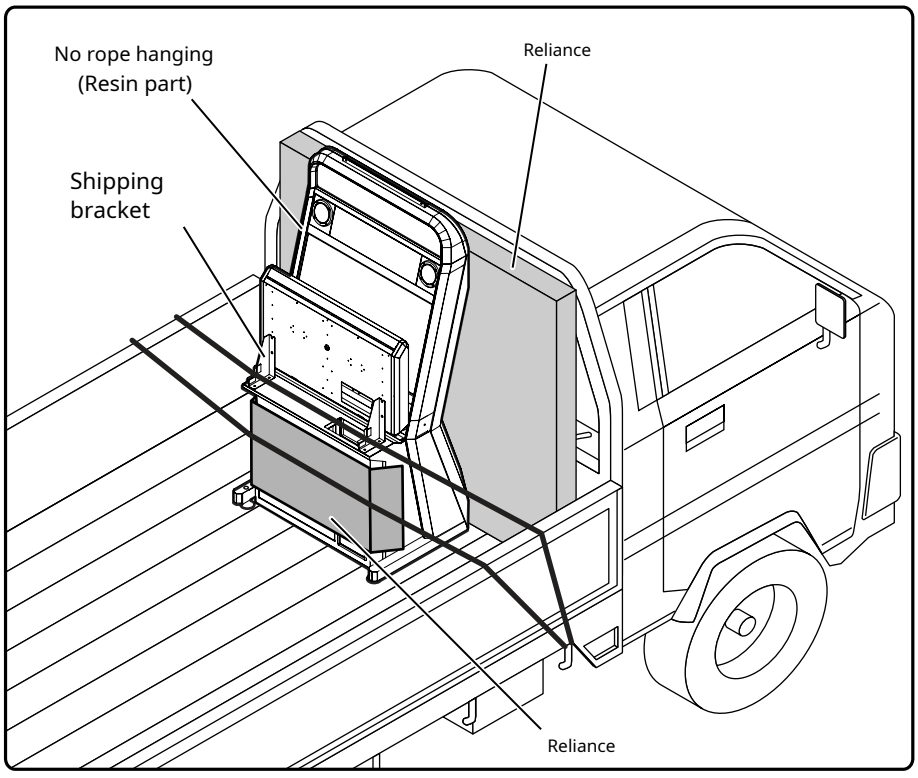

HARD CANDY ハードキャンディ WWW.HARD-CANDY.COM

Chapter 2 Installation

■ 2-1. Installation

- **Installation conditions**

caveat

● **Be sure to observe the following installation conditions.**

- Limited to indoors
- Ambient temperature is 5 ℃ ～ 35 ℃
- Humidity is 10% to 70% and no condensation

- **Places that cannot be installed**

caveat

● **Never install it outdoors or in the following places.**

- Dangerous places for disaster prevention and the front of firefighting equipment
- Places where there is a risk of condensation due to rain leaks, water leaks, or humidity
- Near the indoor pool and shower
- Place exposed to direct sunlight
- Places exposed to direct heat such as heating appliances or places with strong heat
- Around flammable, highly volatile chemicals or dangerous materials
- Places with a slope on the floor (places with a slope of 2 degrees or more)
- A place with strong vibration
- Dusty place
- A place where the installation space cannot be protected

HARD CANDY ハードキャンディ WWW.HARD-CANDY.COM

Installation space

A 500mm space is required on the front for the player's play space and maintenance work space. Please do not use this space as a passage. There is a power cord on the back, so make sure there is 100mm of space so that it does not get caught between the housing and the wall.

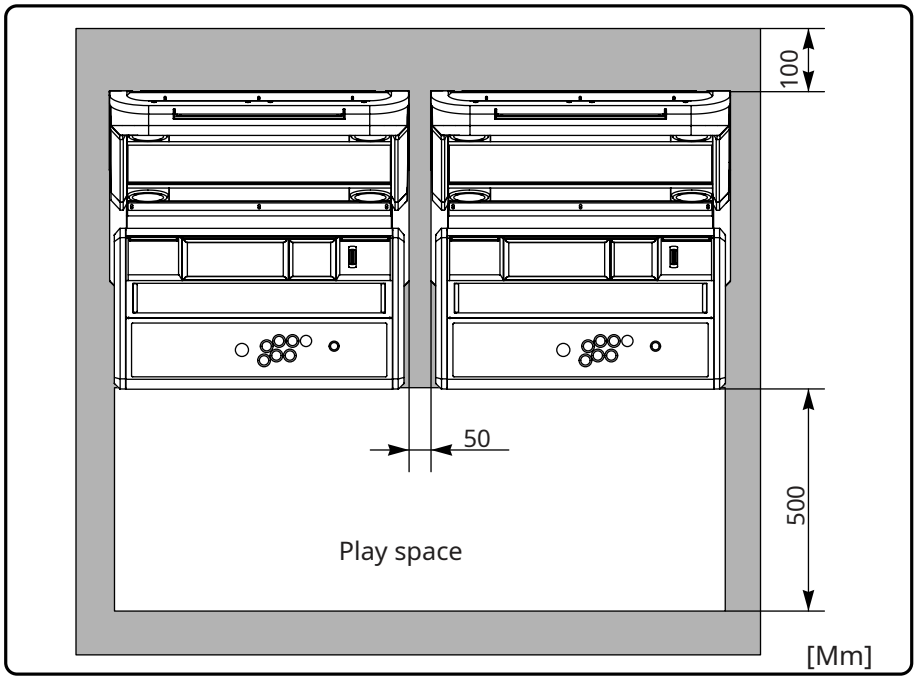

Back-to-back installation

When installing two housings for communication back to back, be sure to observe the installation dimensions shown in the figure below.

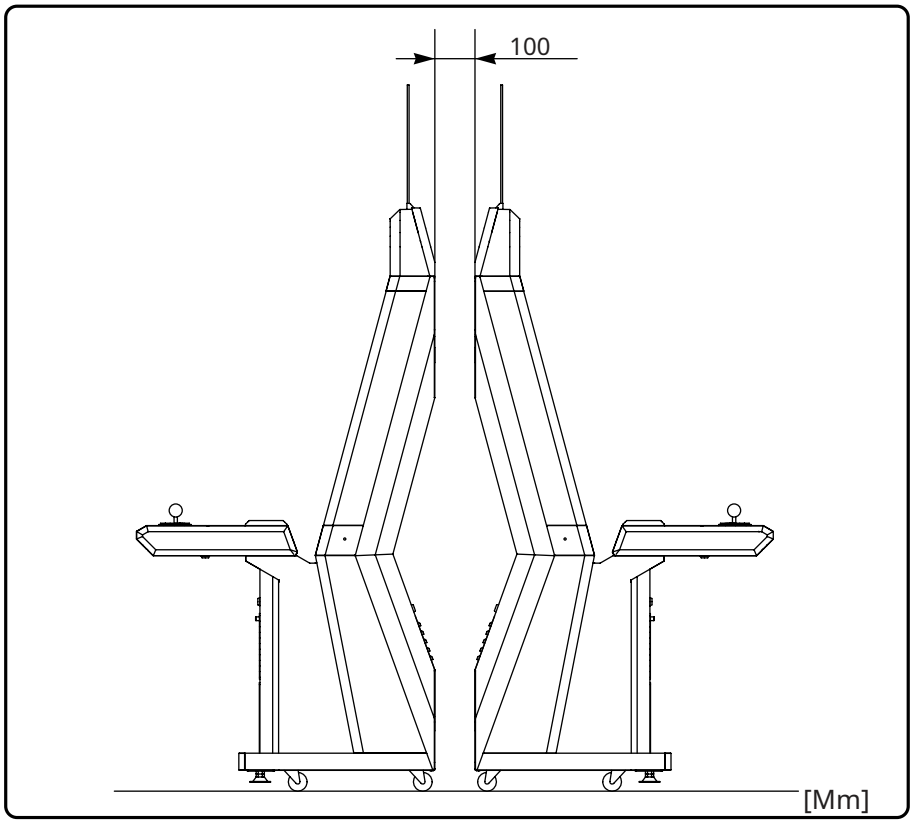

HARD CANDY ハードキャンディ WWW.HARD--CANDY.COM

■ 2-2. Installation of housing

2-2-1 Fixing the housing

1 Bring this product to the installation location and lower the adjusters (2 places) using a monkey wrench so that the casters float 3 mm.
After fixing, attach the attached hole plugs (2 places) and close the holes in the adjuster. * Be careful not to mistake the hole plug for the button cover.

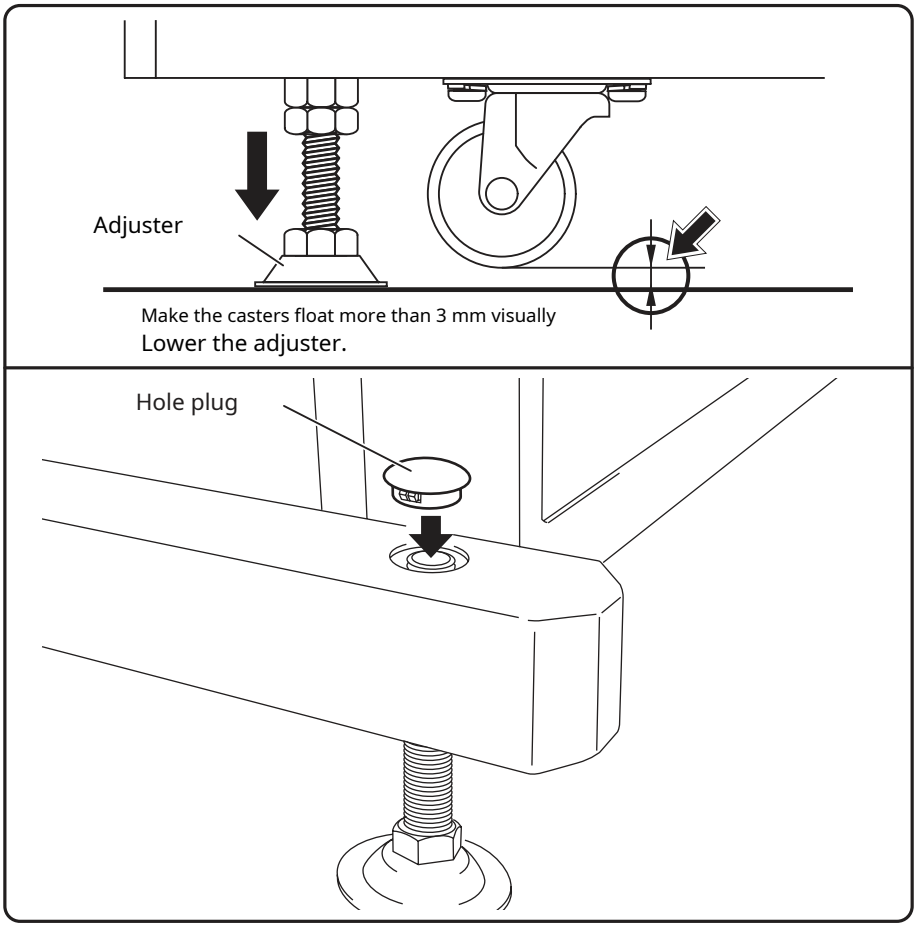

重　要

Be sure to close the hole in the adjuster with a hole plug.

HARD CANDY ハードキャンディ WWW.HARD-CANDY.COM

2-2-2 Assembling the control panel assembly

1 Loosen the bolts (2 places) on the upper side of the shipping bracket and remove the lower side (2 places). Lift the control panel assembly up and remove it.
After removing, remove the bolts (2) remaining on the back of the control panel assembly.[Sems Upset Bolt (W) (Trivalent W): M6x20] 4 places

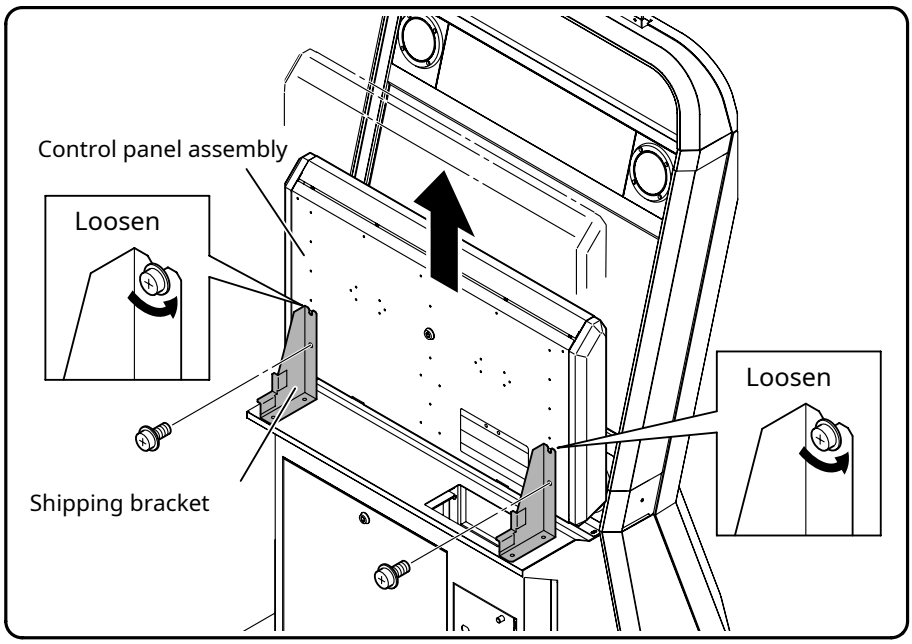

2 Remove the shipping bracket bolts (2 places each) and remove the shipping brackets (2 pieces).[Sems Upset Bolt (W) (Trivalent W): M6x20] 4 places

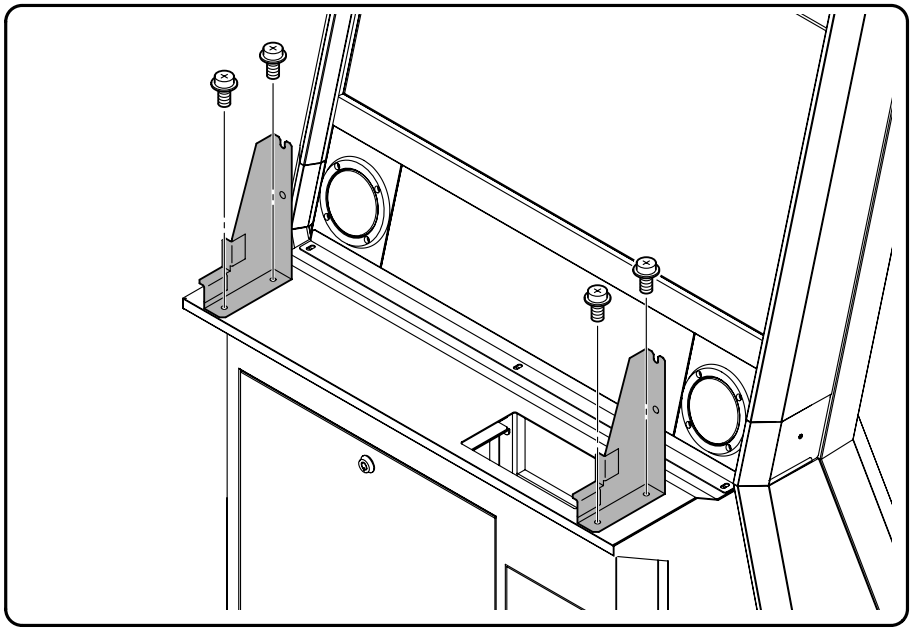

重　要

To Teku During transportation Must when. It will be important, so

HARD CANDY ハード キャンディ WWW.HARD-CANDY.COM

3

2 Temporarily fix the bolts (2) removed in step 1 to the positions shown in the figure.

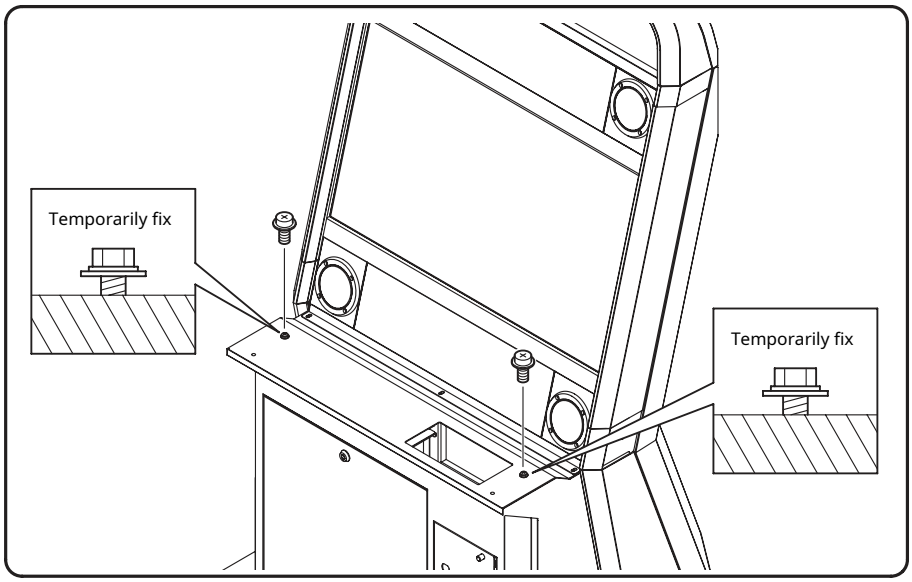

4

Use the service key to unlock the key on the back of the control panel assembly and open the control panel toward you. Remove the screws (2 places B) and remove the control cover (rear).
[Knurled screw with cross hole: M4x7] 2 places

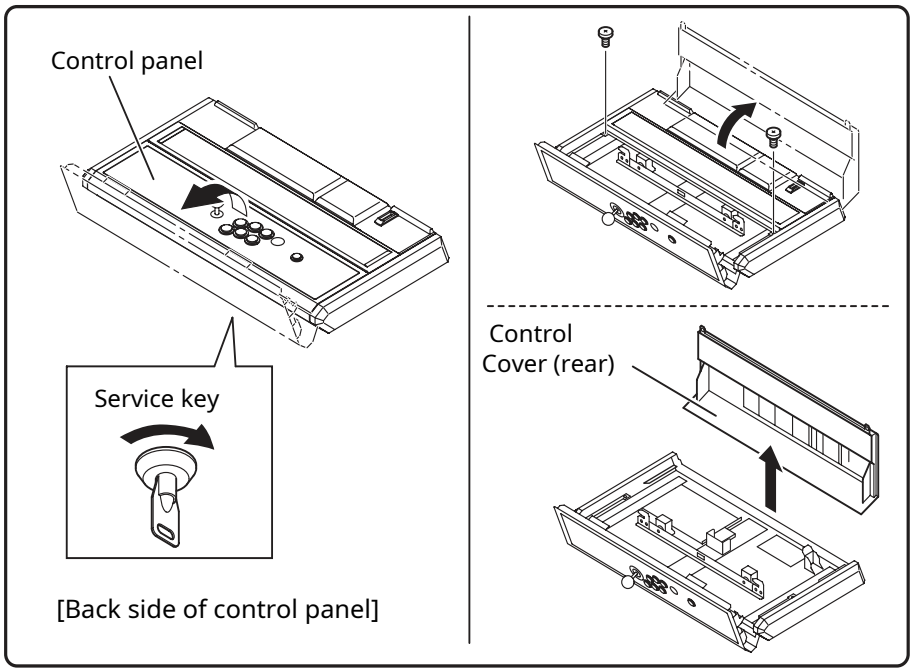

HARD CANDY ハード キャンディ WWW.HARD-CANDY.COM

5

3 Insert the notch hole of the control panel assembly into the head of the bolt temporarily fixed with, slide it toward you, and hook the control panel assembly with the bolt.

Tighten the temporarily fixed bolts, and then fix them with the bolts (2) that were removed.

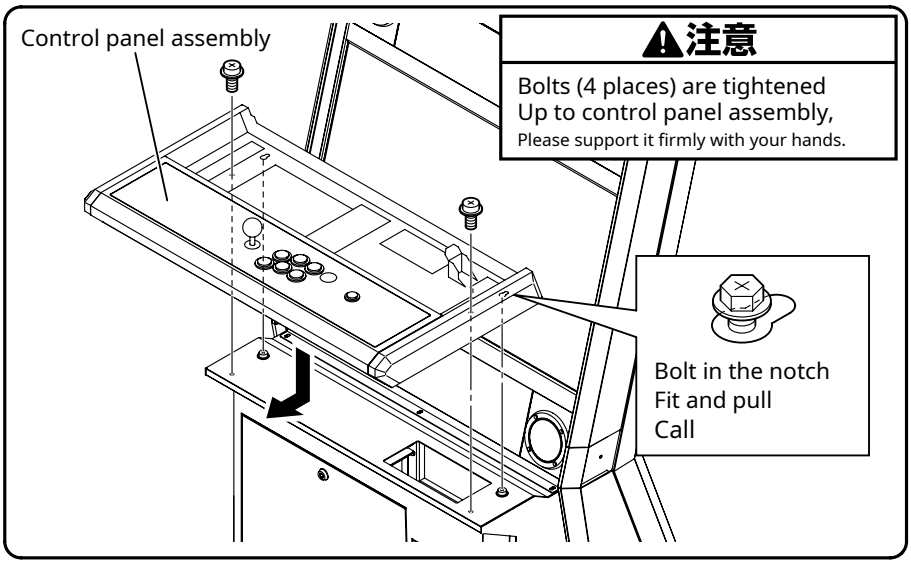

6

Open the front door with the service key.

Fixed inside the front door[P4 / C]Remove the connector and JVS cable or LAN cable, pull it out from the hole in the control panel assembly, and secure it with a clamp. * Incorporates optional Burix JVS board or NESiCAxLive

In that case, connect each connector as shown in the figure. * The X connector is not used, so do not remove it from the clamp.

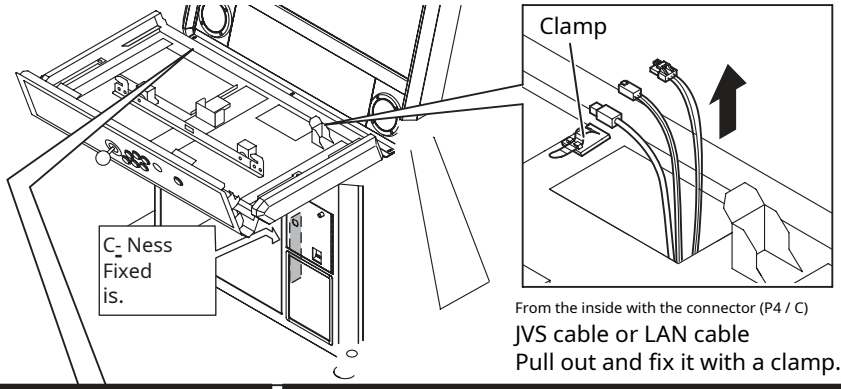

If you have NESiCAxLive installed

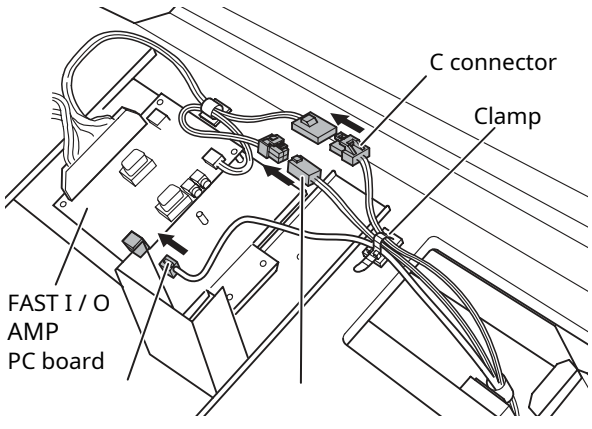

Optional Vewlix
If you have a JVS board installed

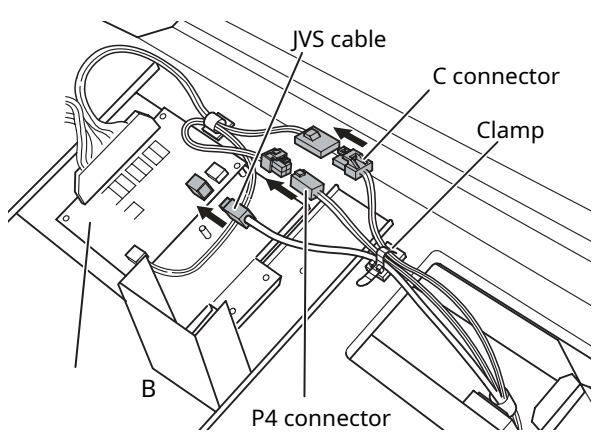

7 Control cover (rear) **4** Install with the screws removed in.
[Knurled screw with cross hole: M4x7] 2 places
* If NESiCAxLive is installed, connect the USB cable to the control panel.
Pull it out of the hole in the ASSY and connect it to the RFID R / W unit ASSY. Also, connect the RFID power harness to the FAST I / O AMP PC board.

Incorporates NESiCAxLive
Work required if

RFID R / W unit assembly wiring diagram

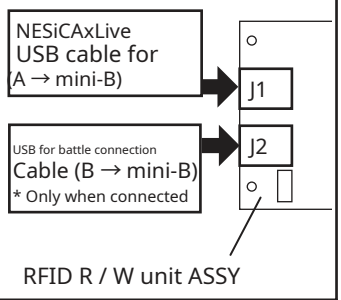

RFID power harness wiring diagram

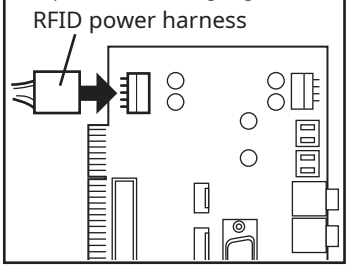

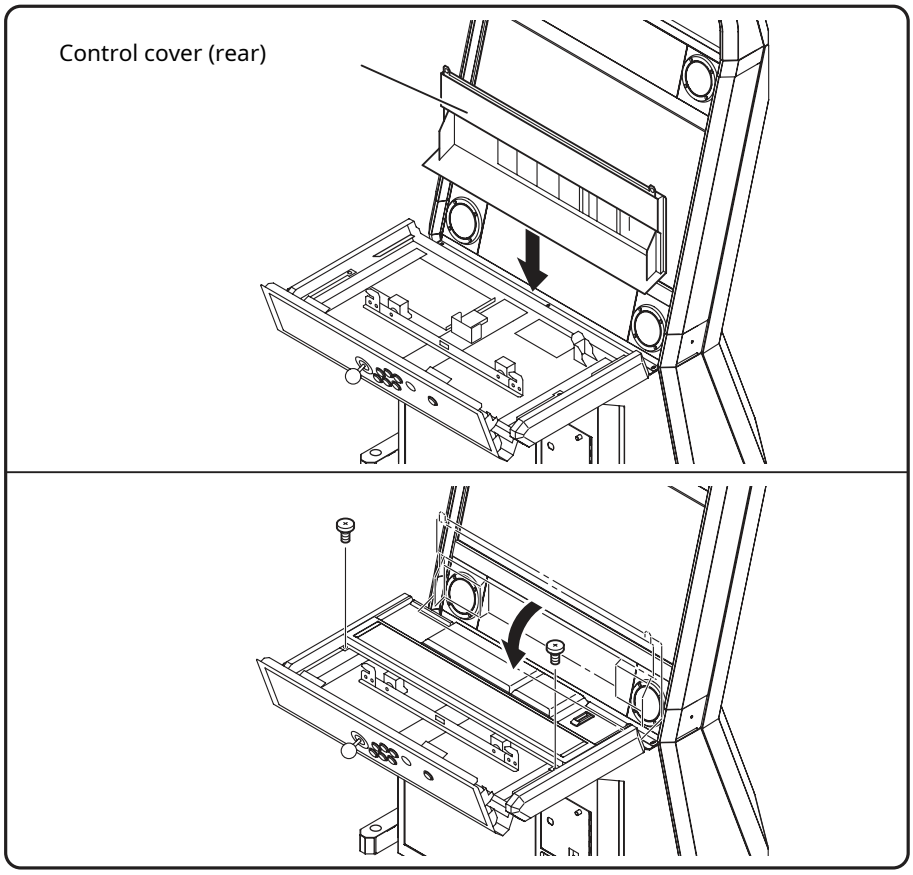

8 Close the control panel and lock it with the service key.

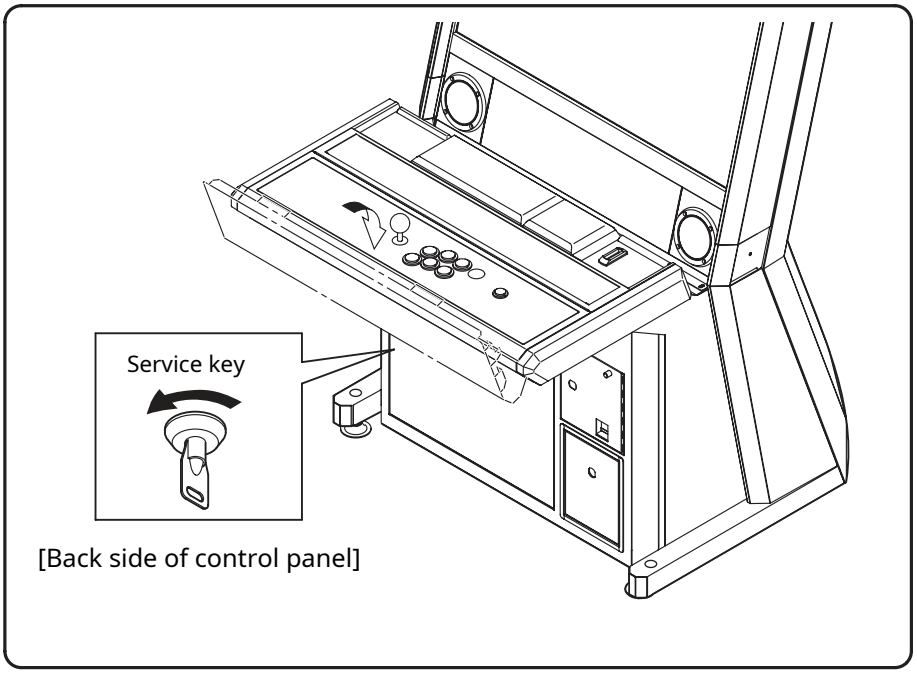

2-2-3 Installation of instruction panel

1 Loosen the screws (2 places), insert the instruction panel from above, and tighten the screws to fix them.

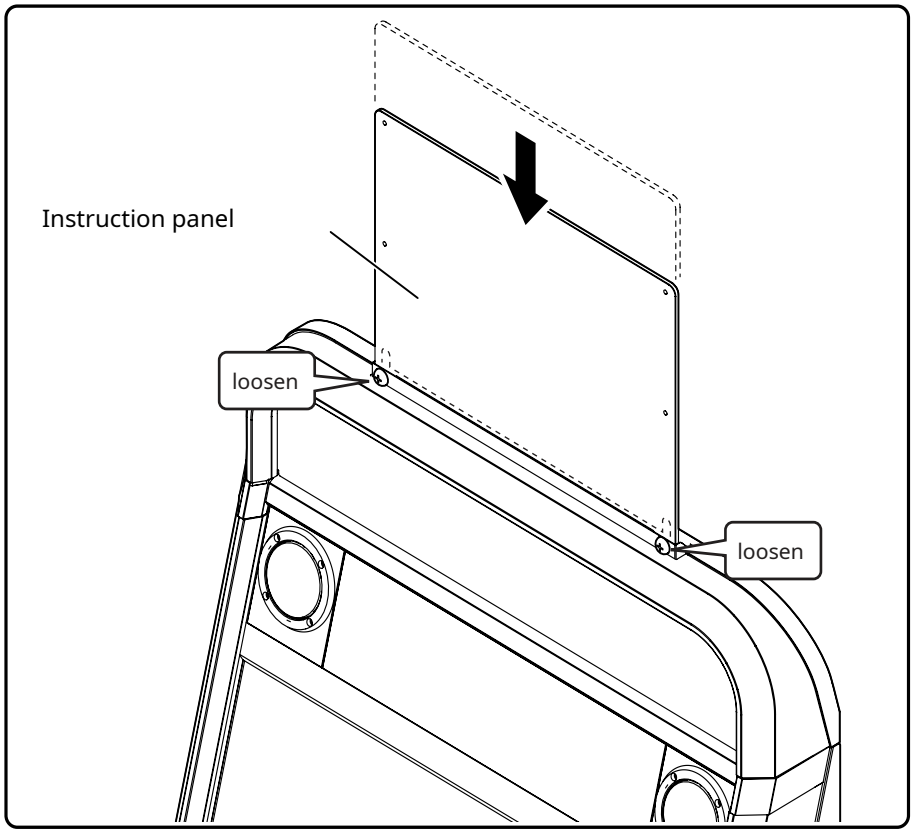

HARD CANDY ハードキャンディ WWW.HARD-CANDY.COM

■ 2-3. Installing the game board

2-3-1 Preparation before installation

caution

Make sure the power switch is off before installing the game board.

1 Open the ejector door and turn off the power switch.

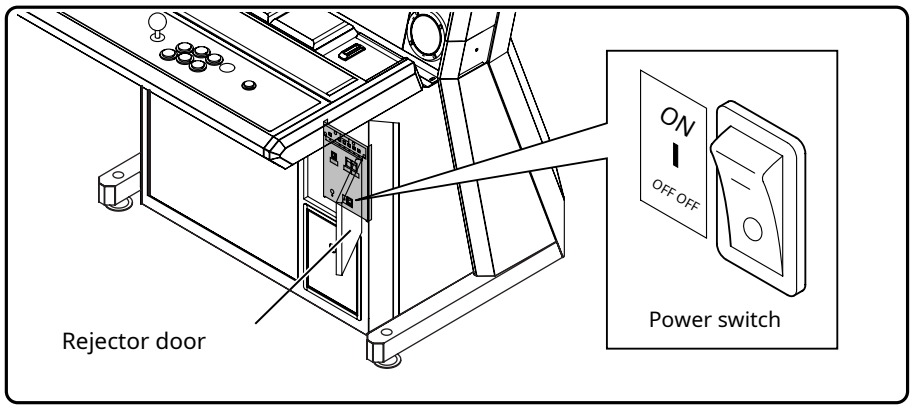

2 Unlock and remove the front door with the service key.

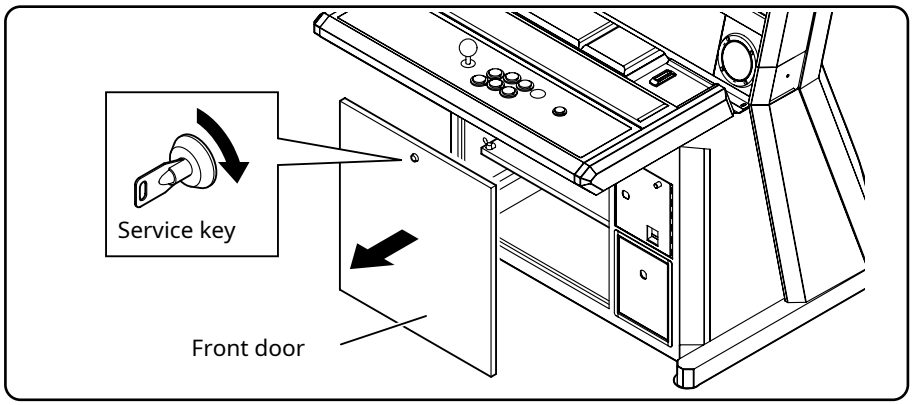

3 Remove the wing bolts (2 places) on the PCB baseboard and pull out the PCB baseboard. Remove the service outlet outlet cover (1 location) according to the game board you are installing.
[Butterfly bolt: M4x25] 2 places / [Flat washer: 4.5x18x1.6t] 2 places

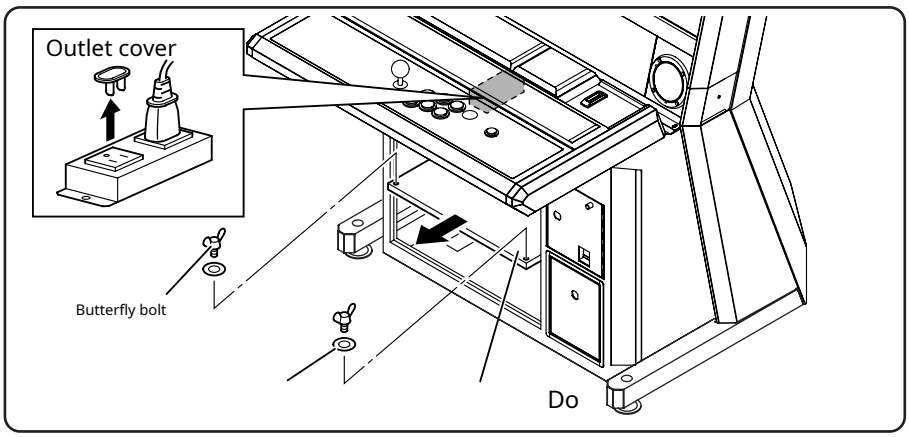

HARD CANDY ハードキャンディ WWW.HARD-CANDY.COM

2-3-2 Installation of TAITO Type X

*** Only when the optional Burix JVS board is installed**

1 Fix TAITO Type X to the PCB baseboard with the screws (4 places) attached to this machine.
[Sems screw (W)-(trivalent W): M4x18] 4 places

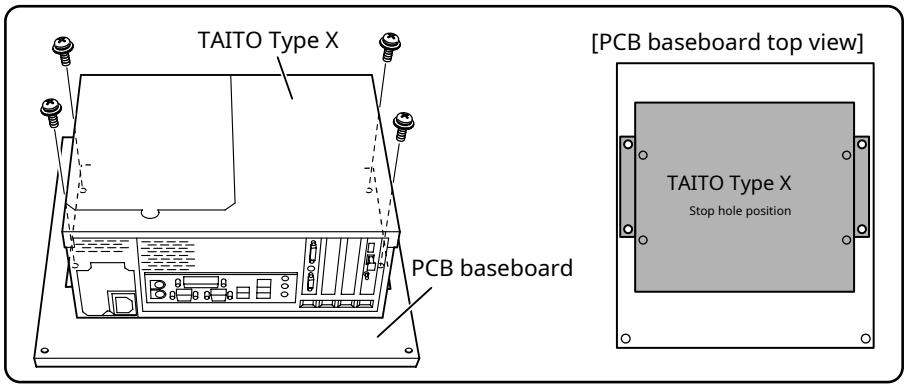

2 Store the PCB baseboard and secure it with wing bolts.
[Butterfly bolt: M4x25] 2 places / [Flat washer: 4.5x18x1.6t] 2 places

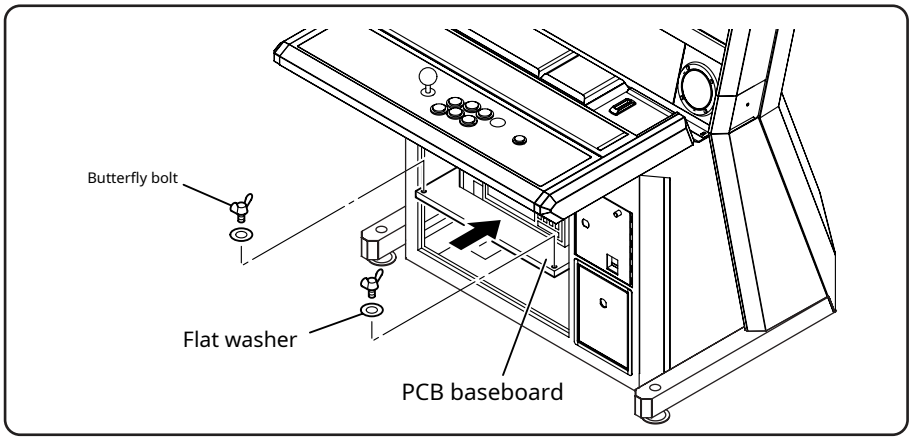

3 Remove the clamps (2 places) and disconnect the video cable and JVS cable. Connect the power cord that comes with "TAITO Type X" to the service outlet.

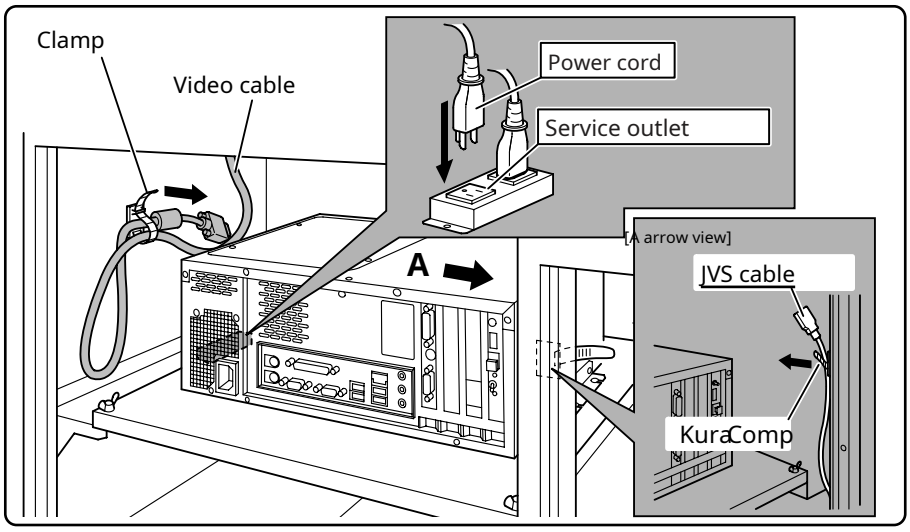

HARD CANDY ハードキャンディ WWW.HARD-CANDY.COM

4 Connect the audio cable supplied with this unit to the audio output terminal (green) of TAITO Type X and the AMP PCB ASSY.

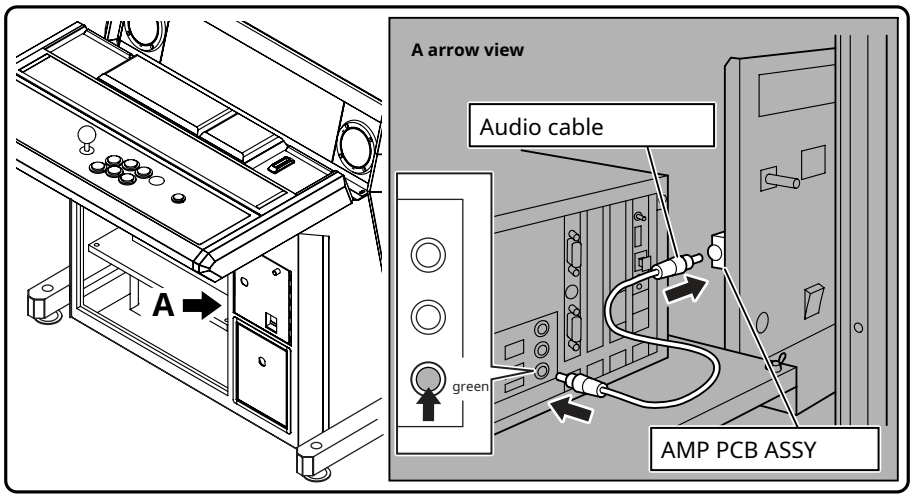

5 3 Connect the power cord and JVS cable connected in step 2 to TAITO Type X. The video cable uses the "DVI → D-SUB" conversion connector that comes with "TAITO Type X".DVI sidePlease connect to. Secure the video cable with a clamp.

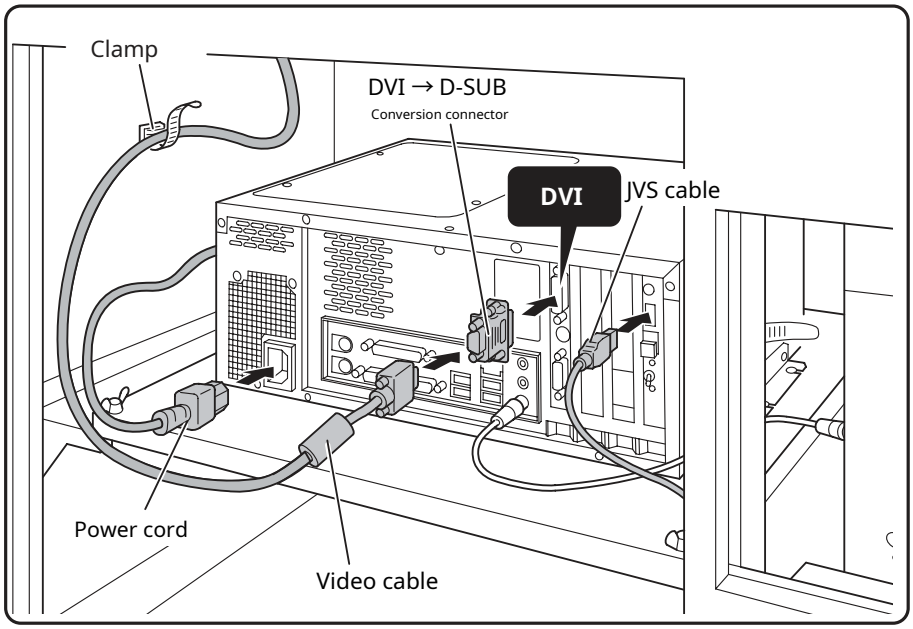

重　要

When connecting a video cable to TAITO Type X, use the conversion connector (DVI → D-SUB) that comes with "TAITO Type X" and connect to DVI.

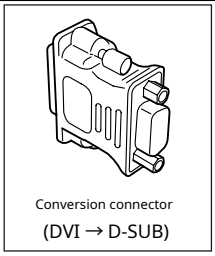

6

HARD CANDY ハードキャンディ WWW.HARD-CANDY.COM

2-3-3 Installation of TAITO Type X 2

*** Only when the optional Burix JVS board is installed**

1 Fix TAITO Type X 2 to the PCB baseboard with the screws (4 places) attached to this machine.
[Sems screw (W)-(trivalent W): M4x18] 4 places

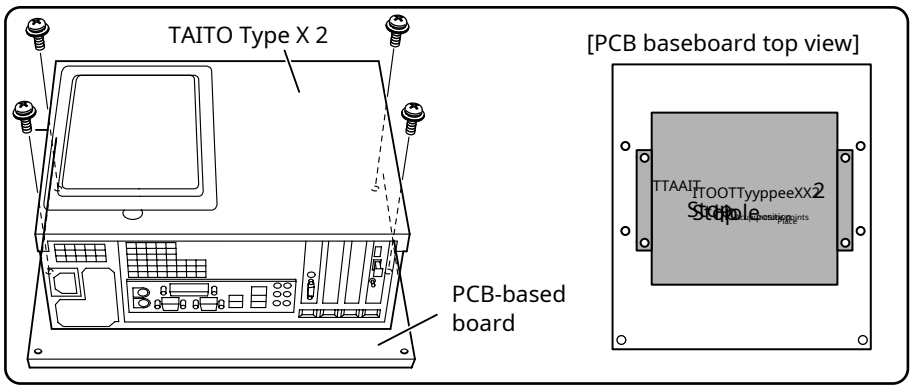

2 Store the PCB baseboard and secure it with wing bolts.
[Butterfly bolt: M4x25] 2 places / [Flat washer: 4.5x18x1.6t] 2 places

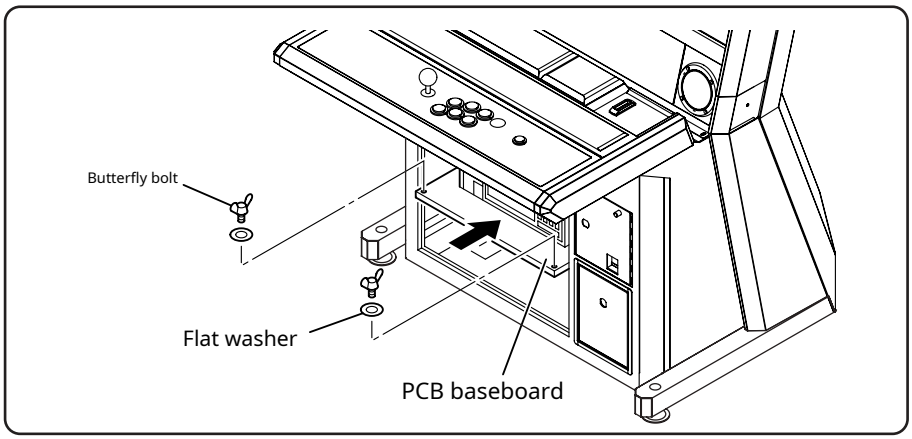

3 Remove the clamps (2 places) and disconnect the video cable and JVS cable. Connect the power cord that comes with "TAITO Type X 2" to the service outlet.

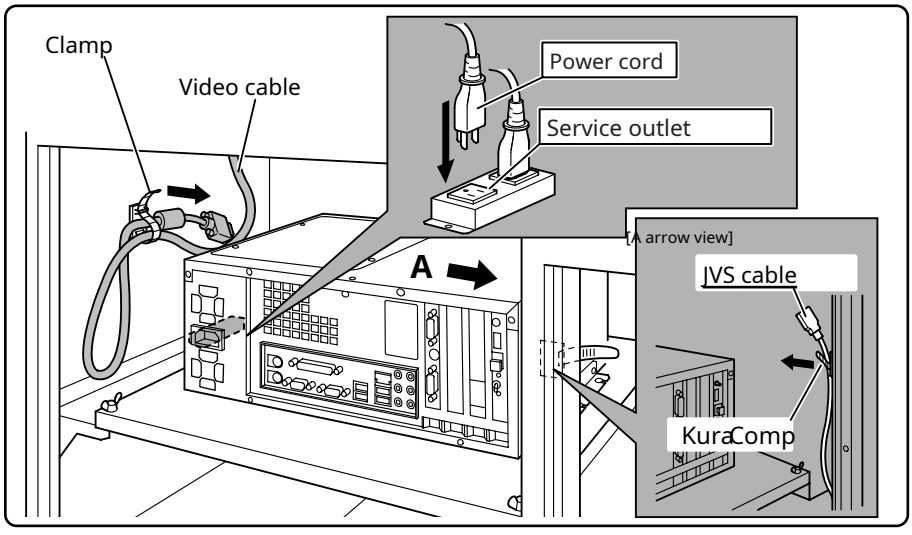

HARD CANDY ハードキャンディ WWW.HARD-CANDY.COM

4 Connect the audio cable supplied with this unit to the audio output terminal (green) of TAITO Type X 2 and the AMP PCB ASSY.

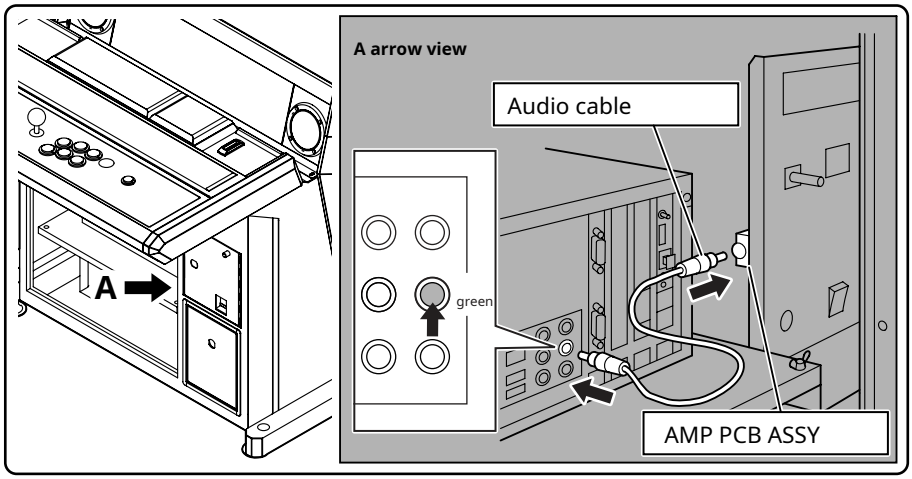

5 3 Connect the power cord and JVS cable connected in step 2 to TAITO Type X 2. For the video cable, use the "DVI → D-SUB" conversion connector included with "TAITO Type X 2" and connect it to the lower DVI. Secure the video cable with a clamp.

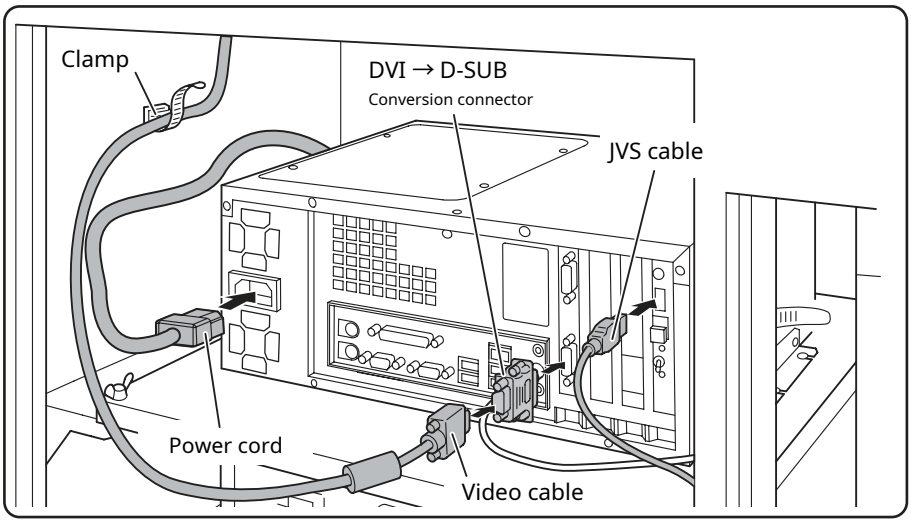

重　要

When connecting a video cable to TAITO Type X 2, use the conversion connector (DVI → D-SUB) that comes with "TAITO Type X 2" to connect to DVI.

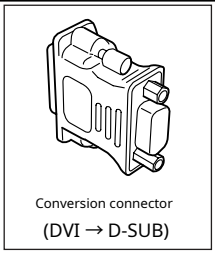

6 Install and lock the front door.

HARD CANDY ハードキャンディ WWW.HARD-CANDY.COM

■ 2-4. Power plug connection

caution

- Do not let the power cord stick out of the aisle. Players and galleries cause her to stumble.
- Be sure to connect the ground wire to the ground terminal.

1 Remove the power cord that came with the unit from the cash box.

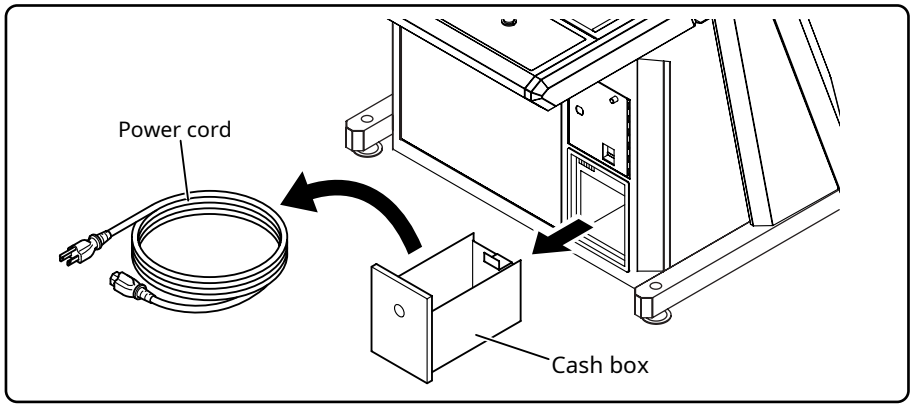

2 Connect the power cord to the power socket on the back of the unit.

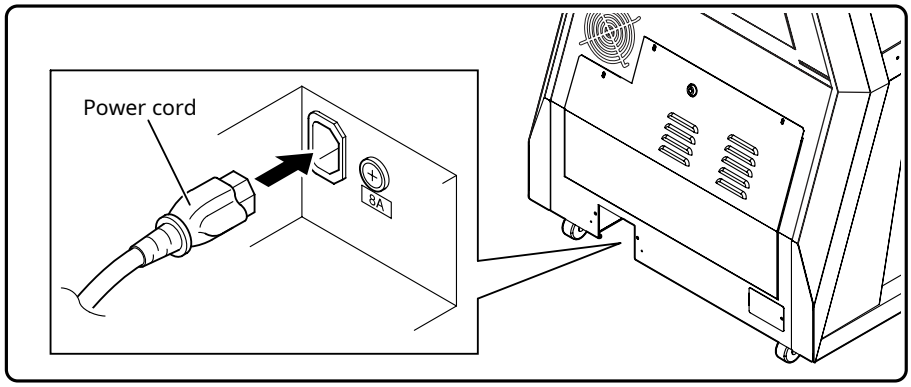

3 Secure the power cord with the nylon clamp and fixing screw that came with the unit. Select either the left or right screw hole and fix it depending on the installation situation.

[Truss screw (chrome): M4x8] 1 place

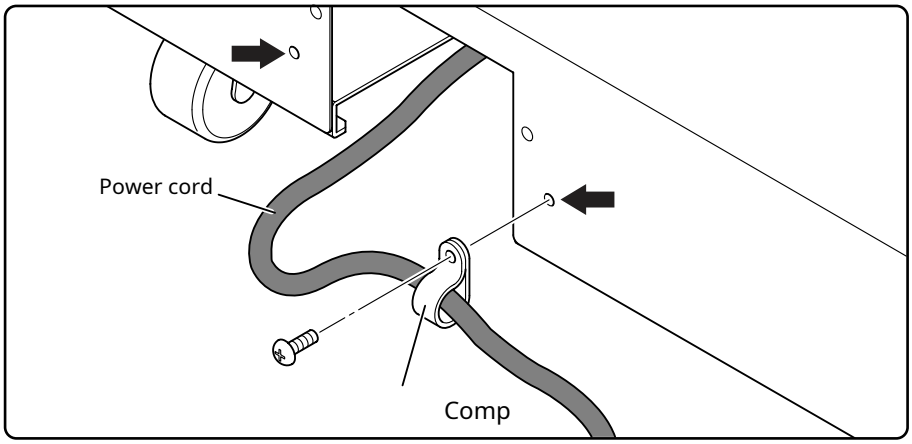

4 ..

HARD CANDY ハードキャンディ WWW.HARD-CANDY.COM

■ 2-5. Communication cable

caution

- Do not let the communication cable stick out of the passage. Players and galleries cause her to stumble.
- After pulling in the communication cable, close the run cover plate to the width of the cable and fix it.

1 Loosen the fixing screws (2 places) on the run cover plate, slide the run cover plate, and pull the communication cable inside. After pulling in, close and secure the run cover plate to the width of the cable.

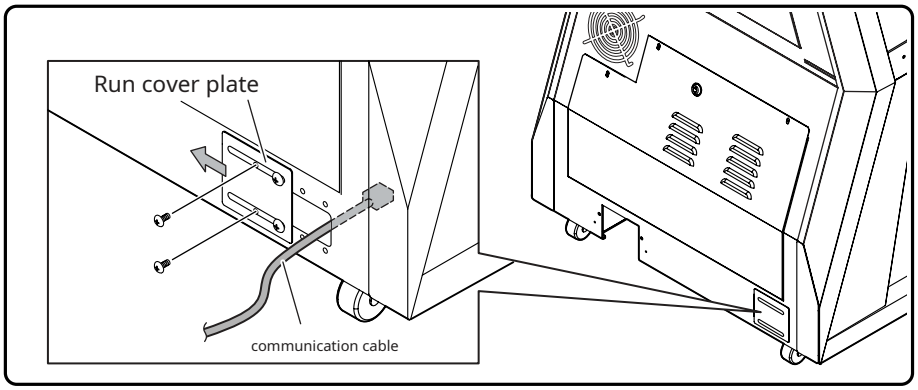

HARD CANDY ハードキャンディ WWW.HARD-CANDY.COM

■ 3-1. Operation check

■ Operation check procedure

To check the operation, follow the procedure below and prepare before operation.

1) Turn on the power switch
2) Check the coin meter
3) Check on the game

1) Turn on the power switch

1 With the game board connected to the chassis, open the ejector door and turn on the power switch.

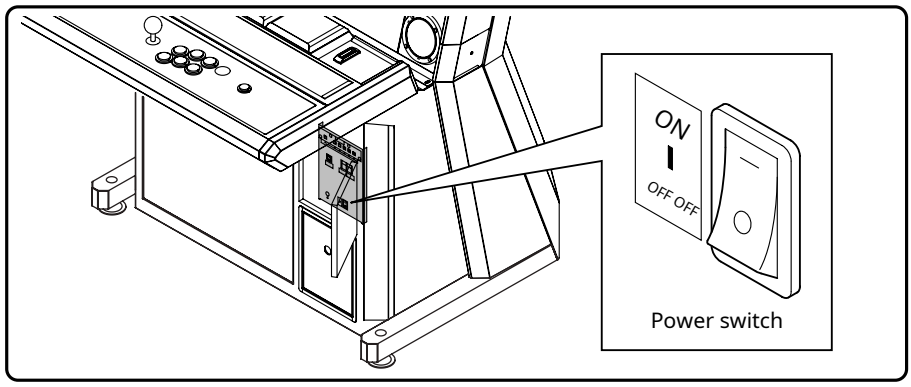

重　要

If dew condensation occurs on the inside of the LCD monitor glass surface when the power is turned on at the time of initial installation or when the power is turned on without energizing for a long time, the dew condensation can be eliminated by energizing for about 3 hours.

2 Check if the image is displayed on the LCD monitor screen.

HARD CANDY ハードキャンディ WWW.HARD-CANDY.COM

2) Check the coin meter

1 Insert coins and check if the coin meter works properly. The coin meter can be checked from either the cash box side or the rejector door side. (Check the coin meter with the I / O board and the game board connected.)

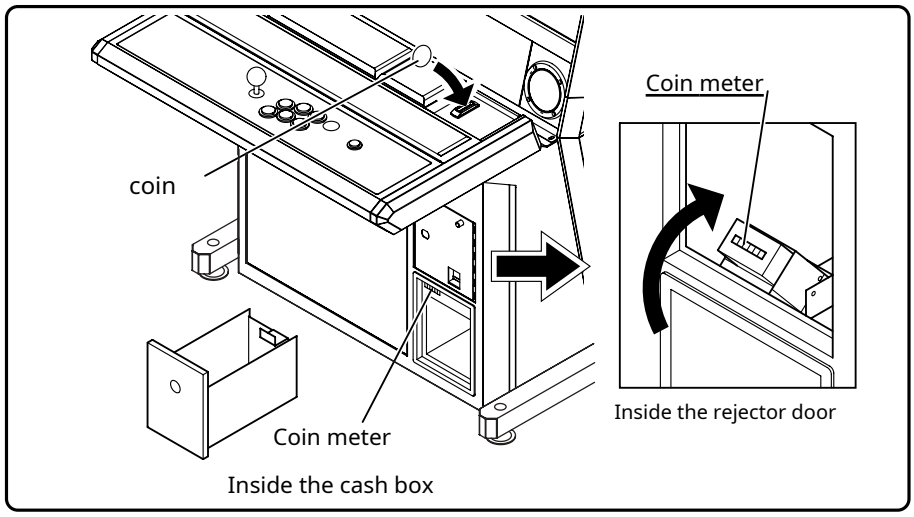

2 Make sure that the indicated value of the coin meter is added. * Even if you insert a coin when the game board and I / O board are not connected, the coin will be used.

The meter reading is not added.

3) Confirmation on the game

1 Make sure that the game can proceed normally.

HARD CANDY ハードキャンディ WWW.HARD-CANDY.COM

■ 3-2. Function explanation

■ Central control

The central control is inside the ejector door.

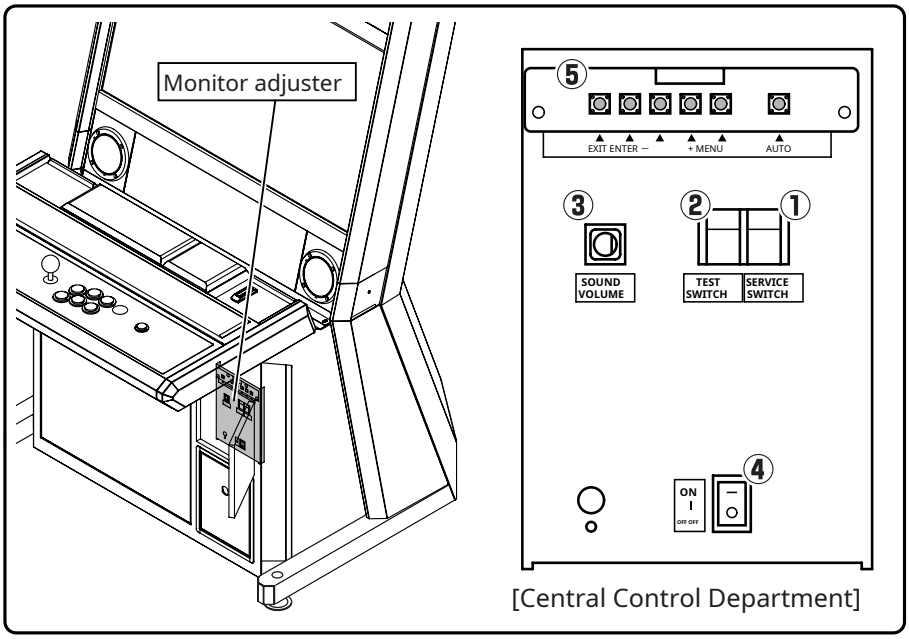

[Central Control Department]

① SERVICE SWITCH (service switch)

You can increase your credit without counting the coin meter.

② TEST SWITCH

A switch to activate the test mode.

③ SOUND VOLUME

Adjust the volume output from the speaker. The sound becomes louder in the clockwise direction.

④ Power switch

This is the power switch for this unit.

⑤ LCD monitor regulator

There is a monitor adjuster inside the rejector door. The maintenance man or technician should adjust the LCD monitor.

when.[LCD monitor adjustment → page 58]

HARD CANDY ハードキャンディ WWW.HARD-CANDY.COM

■ 3-3. About service outlets

⚠注意

The total current capacity of the service outlet of this machine is 4A. Never use a service outlet for equipment with a total maximum current of more than 4A, as it may cause overheating and fire.

■ Location of service outlets

The service outlet is located on the far left inside the front door. When using, remove the concent cover. Also, if you are not using it, install an outlet cover.

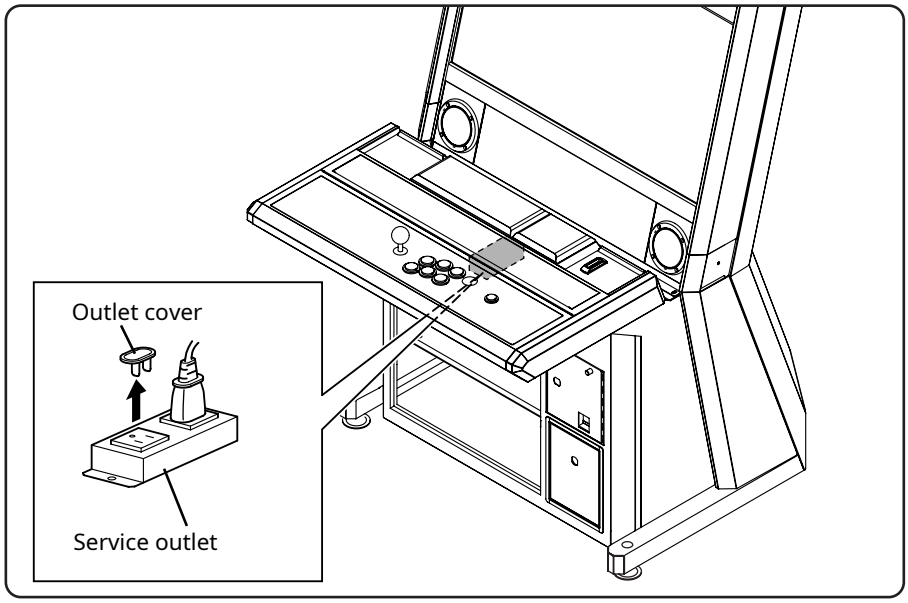

重　要

The service outlet works with the power switch. When using it, turn on the power switch.

HARD CANDY ハードキャンディ WWW.HARD-CANDY.COM

■ 3-4. Replacement of instruction sheet

1 Remove the two screws, remove the instruction panel from the machine, and remove and replace the instruction sheet as shown in the figure below.

[Trust screw (chrome) M4x10] 5 places / [Cap nut (chrome) M4] 5 places

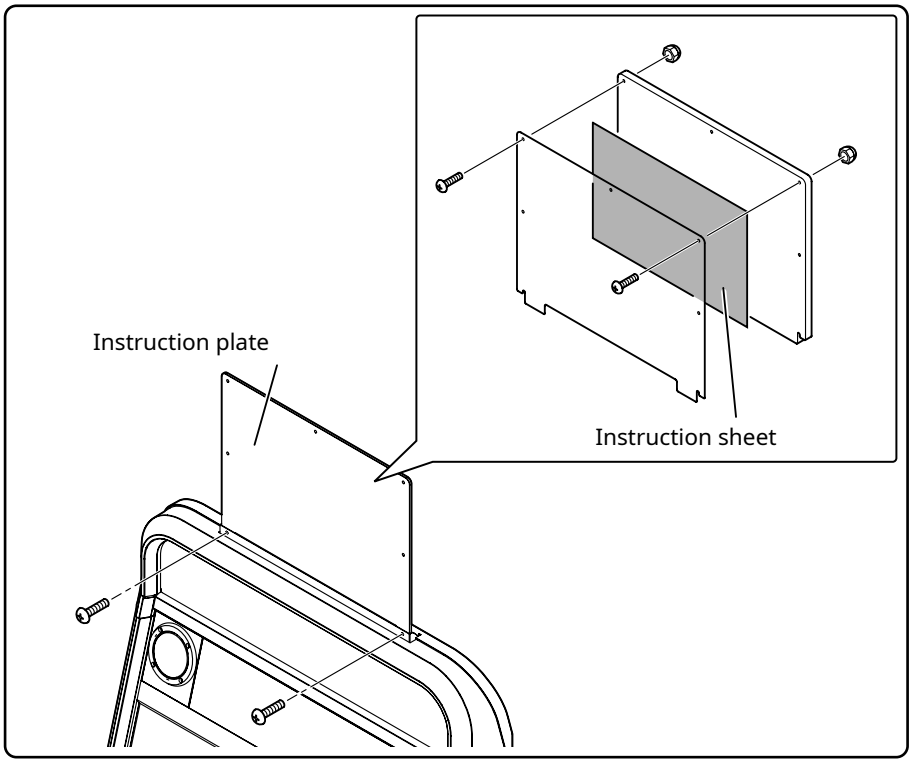

■ 3-5. Pasting the instruction sticker sheet

1 Please replace the instruction sticker sheet attached to this machine according to the price setting.

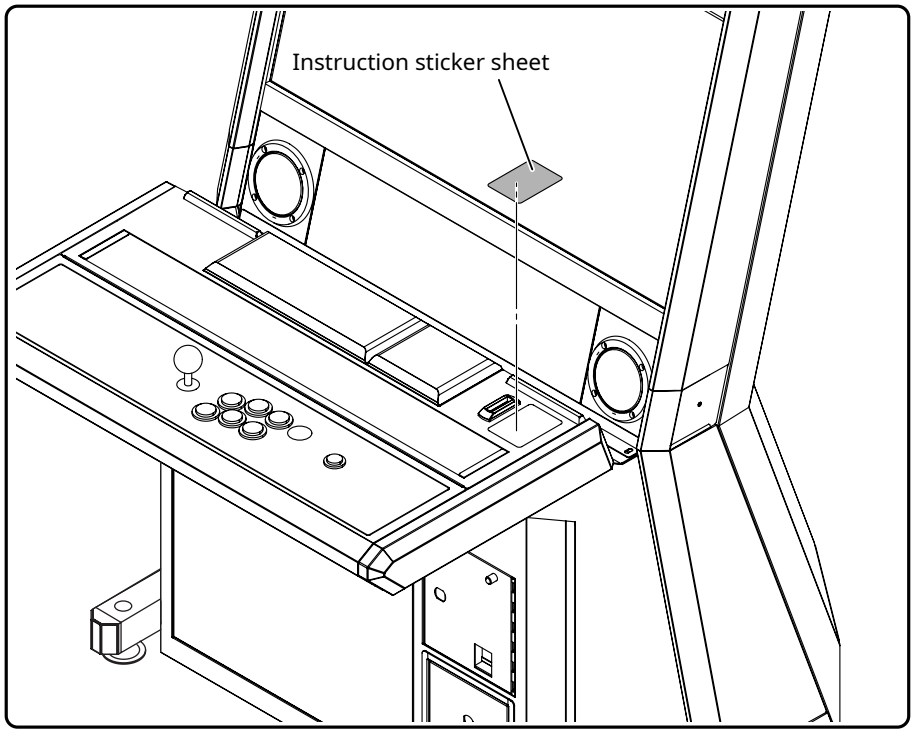

HARD CANDY ハード キャンディ WWW.HARD-CANDY.COM

■ 3-6. Replacing the display sticker

caution

Be sure to turn off the power switch when attaching the display sticker.

1 Open the ejector door with the service key and turn off the power switch.

2 Use the service key to unlock the key on the back of the control panel assembly and open the control panel toward you. Remove the screws (2 places) and remove the control cover (rear).
[Knurled screw with cross hole: M4x7] 2 places

Incorporates NESiCAxLive
Work required if

RFID R / W unit assembly wiring diagram

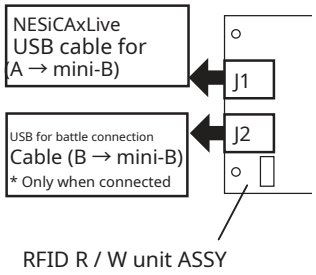

RFID power harness wiring diagram

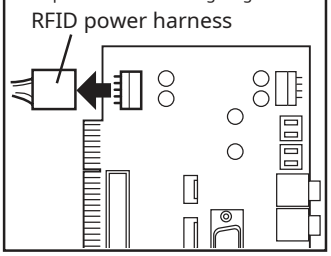

* If NESiCAxLive is installed, connect the USB cable to the RFID R / W unit.
Unplug the RFID power harness from the ASSY and the RFID power harness from the FAST I / O AMP PC board.

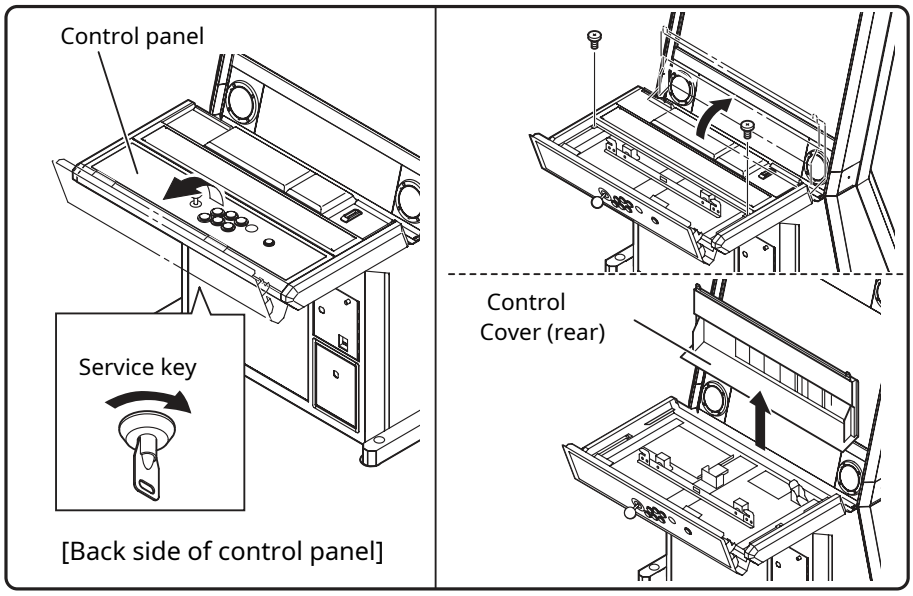

3 Remove the nuts (2 places) and remove the display card bracket and display card glass. Place the display sticker between the display card bracket and the display card glass.
[Flange nut: M4] 2 places

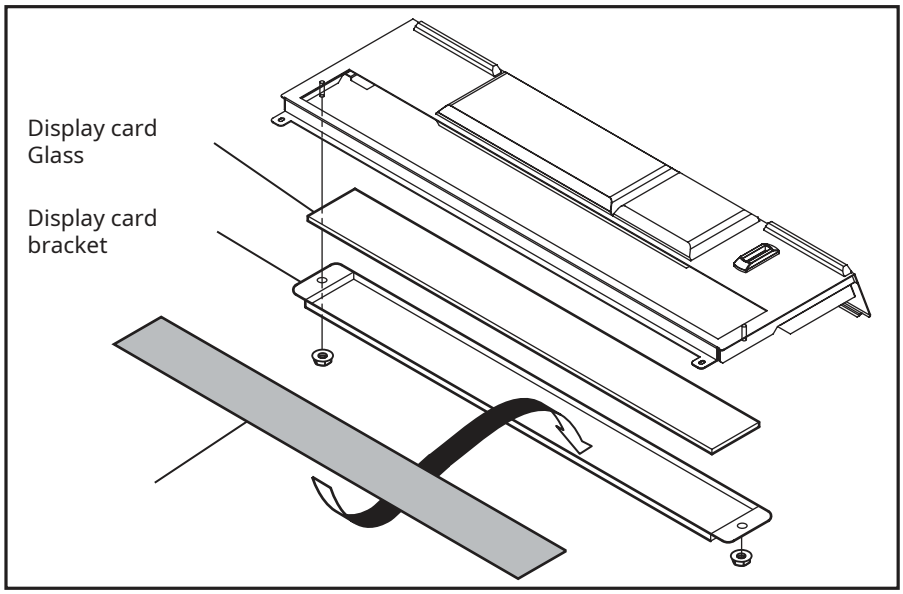

About maintenance

⚠警告

Maintenance and inspection must be performed by a maintenance man and a technician.

Contents of Chapter 4

■ **4-1. Inspection** ____ **38**

■ Daily inspection 38

■ Inspection items (7 items in total) 38

■ **4-2. Cleaning** ____ **39**

4-2-1 Cleaning the LCD monitor 39

4-2-2 Cleaning the ejector 39

■ **4-3. Optional items** ____ **40**

4-3-1 Adjustment of switching regulator (power supply board) 41

4-3-2 Installation of JAMMA VIDEO standard (JVS) compatible game board 42

■ **4-4. How to remove and replace parts** ____ **44**

4-4-1 Replacing the control panel 45

4-4-2 Replacing the joystick and push button 48

4-4-3 Replacing the rejector 50

4-4-4 Replacement of various boards 51

4-4-5 Fuse replacement 53

■ **4-5. LCD monitor adjustment** ____ **54**

■ **4-6. Rotation of LCD monitor** ____ **56**

■ **4-7. Fixing the control panel assembly** ____ **65**

■ **4-8. Simple troubles and countermeasures** ____ **67**

HARD CANDY ハードキャンディ WWW.HARD-CANDY.COM

■ 4-1. Inspection

⚠警告

Be sure to perform daily inspections.

■ Daily inspection

Please inspect or clean according to the following items before the start of business and at the end of business. Pay particular attention to the areas where the player touches.

■ Inspection items (7 items in total)

① Damaged power cord

・ Are there any objects (such as other housings) on the power cord?

② Is the power plug firmly inserted?

・ Is the ground wire connected?

③ Presence or absence of appearance damage

・ Is the cabinet scratched or dirty?

④ Check the installation space

・ Is the housing displaced from the installation position due to looseness of the adjuster? ・ Is the adjuster all grounded?

・ Are the adjuster bolts, caster wheels, etc. damaged? ・ Are the adjuster hole plugs attached?

⑤ Can each door be locked or unlocked?

・ Is the front door distorted?

・ Is the ejector door distorted?

⑥ Operation check (whether the game can be played normally)

・ Can you hear the sound?

・ Are there any abnormalities on each button?

⑦ Do the meters work?

・ Does the coin meter work with the game board and I / O board attached?

HARD CANDY ハード キャンディ WWW.HARD--CANDY.COM

■ 4-2. Cleaning

4-2-1 Cleaning the LCD monitor

Use a soft cloth such as cotton to wipe off dirt. Gently wipe off any dirt that is difficult to remove with a cloth dampened with a small amount of water. After wiping it off, wipe it again with a dry cloth.

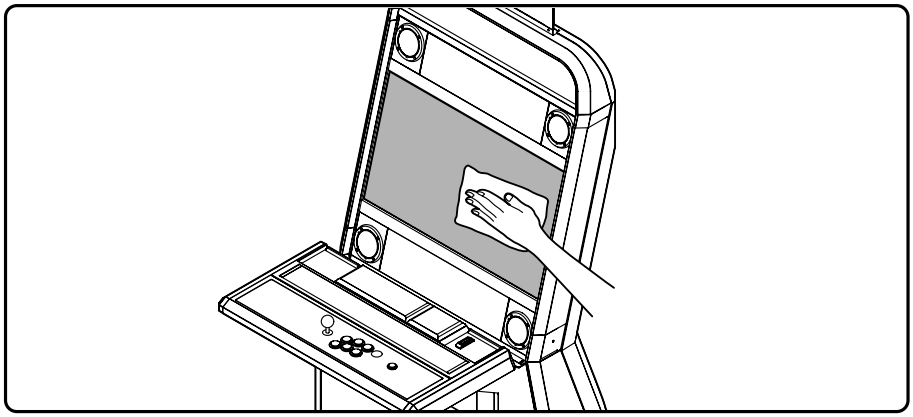

重　要

Never use solvents or chemicals (thinner, benzine, wax, alcohol, other polishing cleaners, etc.) as they will damage the housing (painting, resin surface, etc.).

4-2-2 Cleaning the ejector

1. Open the ejector door and turn off the power switch.

2. Open the rejector gate and clean the inside. Soak a soft cloth in a neutral detergent diluted with water, squeeze it tightly, and then wipe off the dirt. After wiping it off, wipe it again with a dry cloth.

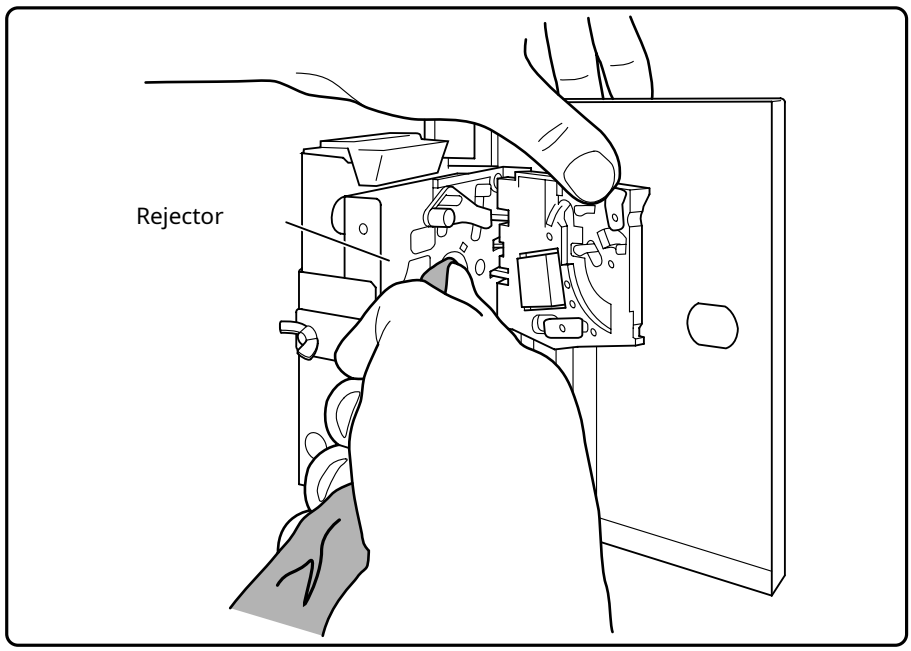

HARD CANDY ハード キャンディ WWW.HARD--CANDY.COM

■ 4-3. Optional items

■ Alarm device

It is powered by a 9 volt battery to keep it working even when the chassis is powered off. Make sure that the alarm is activated during daily inspections and coin collection.

1. Pull out the cash box and remove the buzzer cover of the alarm device. [Sems screw (S): M3x8] 3 places

2. Remove the batteries and replace them with new ones. Please purchase a commercially available 9 volt battery.

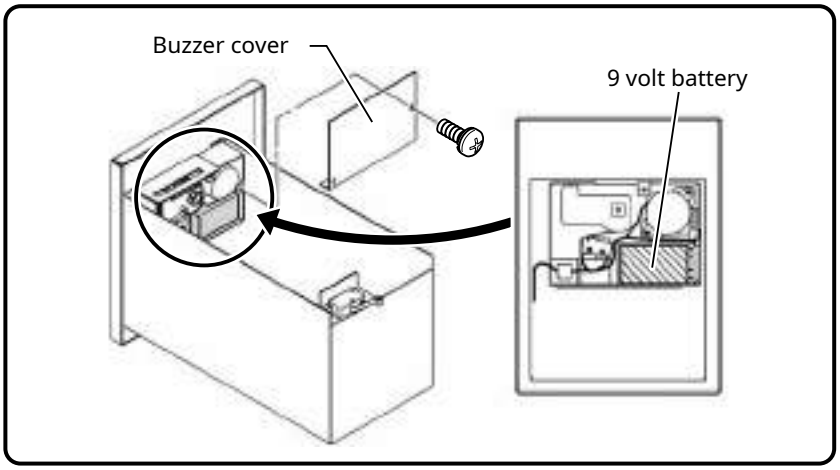

3. Check the operation after replacement. If it is working properly, reattach the buzzer cover. Return the cash box to the chassis.

■ Burix JVS Board

This kit is a kit for operating a JVS compatible game board with a Burix diamond.

■ Burix New JAMMA Power Kit

This kit is a kit for operating a JVS compatible game board with a Burix diamond.

■ TAITO Type X2 Battle Kit

This kit is compatible with the battle game for TAITO Type X2.

■ Burix JAMMA Kit

This kit is a kit for operating the Burix JAMMA compatible game board with the "Buurix New JAMMA Power Kit" attached. With a diamond

■ VL Control Panel 2J14B

This kit is a control panel kit for Burix. [2 joysticks, 14 buttons]

■ VL 1P-2P connector conversion harness

Used to change the control panel signal to the 2P side when using the "TAITO TypeX2 Battle Kit".

HARD CANDY ハードキャンディ WWW.HARD-CANDY.COM

~ Only if you have installed the optional "Buurix New JAMMA Power Kit" ~

4-3-1 Adjustment of switching regulator (power supply board)

⚠注意

- A store maintenance man or a technician should adjust the switching regulator.
- Do not make the output voltage higher than the specified value by adjusting the voltage of the switching regulator. There is a risk of destroying the IC on the game board.
- This work is required only when using the optional Burix new JAMMA power supply kit.

1 Unlock and remove the front door key with the service key.

2 Adjust each volume of the switching regulator. Turn the volume slowly.

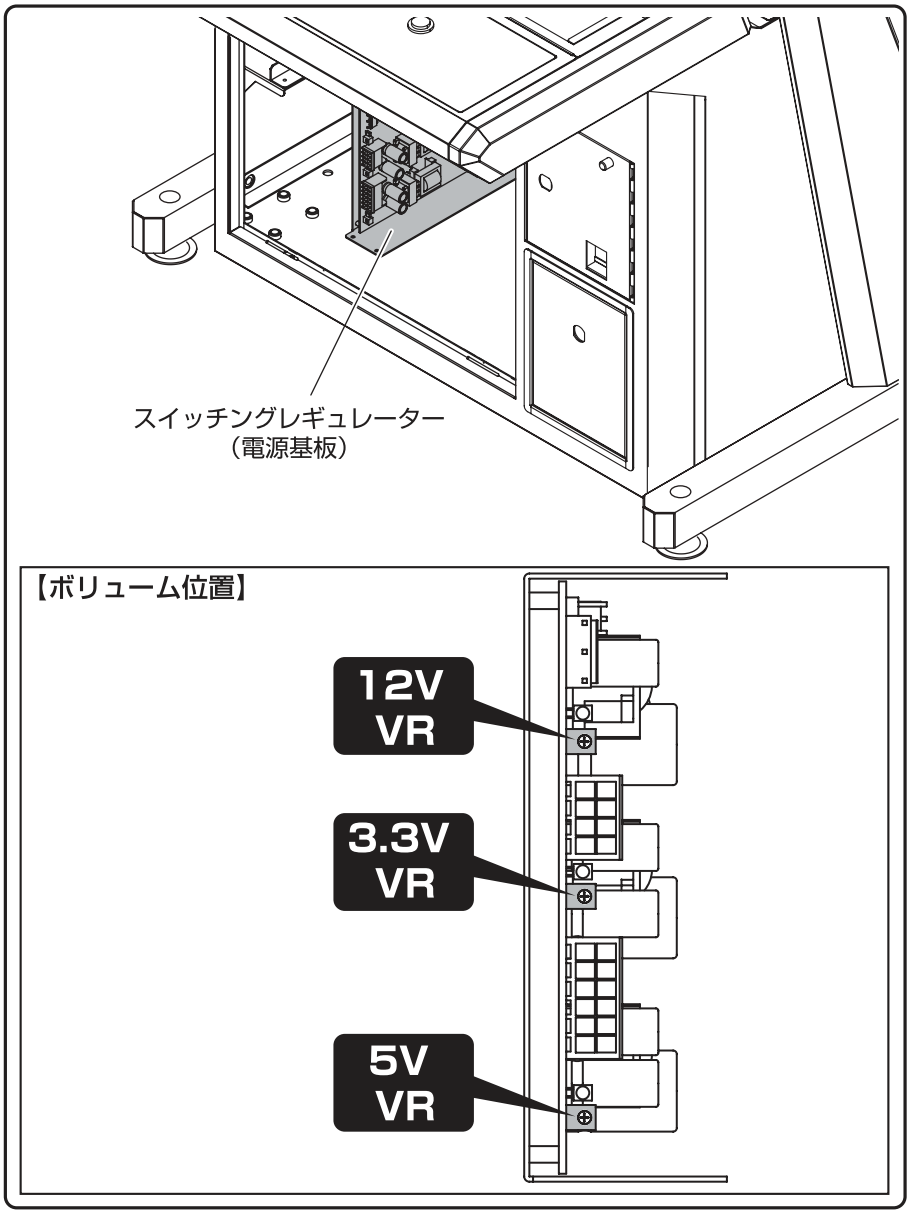

HARD CANDY ハードキャンディ WWW.HARD-CANDY.COM

-With the optional "Buurix New JAMMA Power Supply Kit"

Only if you have the "Buurix JVS Board" installed ~

4-3-2 Installation of JAMMA VIDEO standard (JVS) compatible game board

caution

- This unit does not support the monitor horizontal synchronization frequency of 15.75kHz. Please change to 31kHz in the game board settings and connect.
- When connecting another company's game board, use the special harness specified by the game board manufacturer.
- Burix The current capacity of the power supply board of the new JAMMA power supply kit (option) is DC12V 4A, 5V 10A, 3.3V 12A. Never use a game board that requires more than this value. Failure to do this will cause an unexpected accident.
- When not using the new Burix JAMMA power supply kit (option), disconnect the connector from the new Burix JAMMA power supply kit (option) and bundle the harness with a clamp.
- Depending on the game board, it may not be possible to display properly on the Burix diamond. In order to display normally, you will need to keep the game board, and in some cases, you will need to pay for custom support and adjustment. note that.

1 Secure the game board to the PCB baseboard. For the fixing screw, use the screw that came with the game board to be installed.

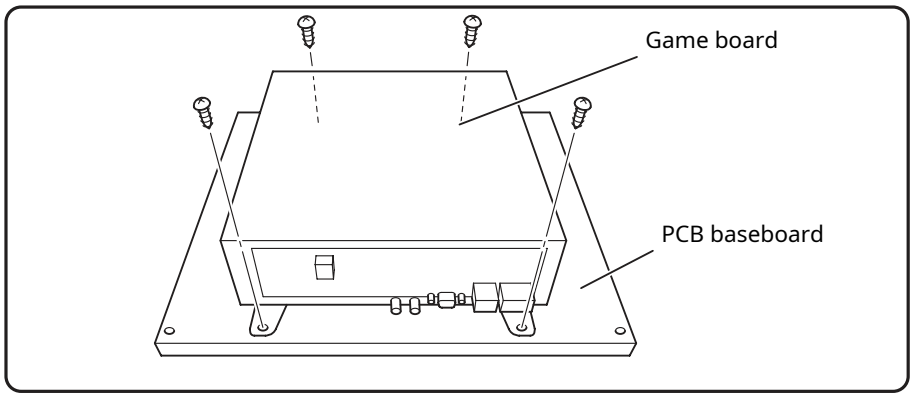

2 Store the PCB baseboard and secure it with wing bolts.
[Butterfly bolt: M4x25] 2 places / [Flat washer: 4.5x18x1.6t] 2 places

Power connector connection

3 Remove the power supply board harness that is secured by the clamps (2 places).

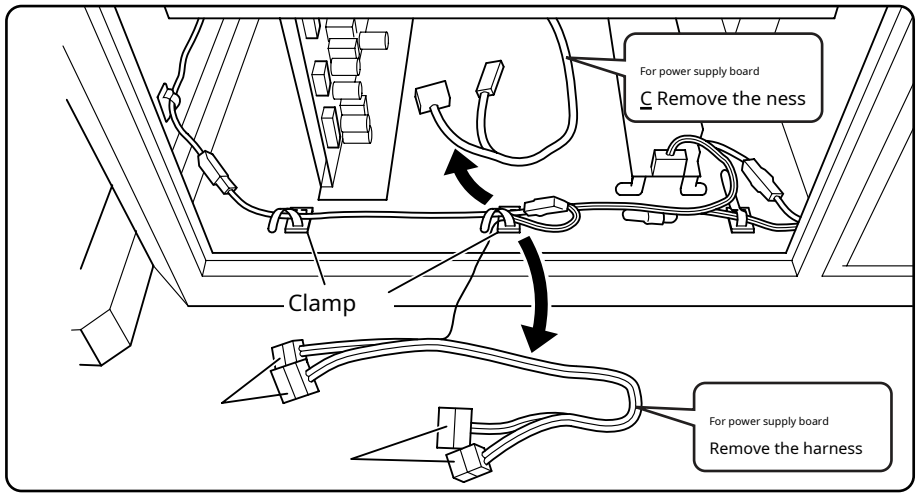

HARD CANDY ハードキャンディ WWW.HARD-CANDY.COM

4 On the power supply board **3** Connect the A, B7, and B8 connectors (3 locations) of the power supply board harness that you removed in step 1

Connect

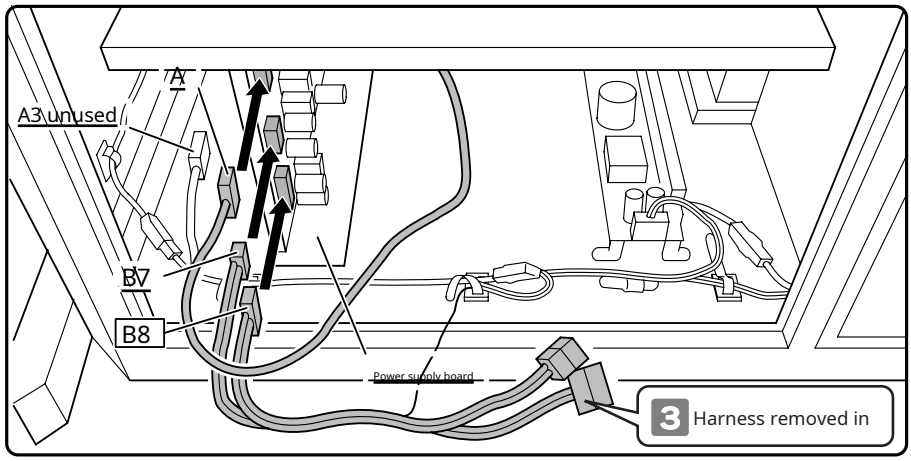

Game board connection example

5 When connecting the cable to the game board, refer to the instruction manual that came with the game board. Also, use the audio cable supplied with this unit for the audio cable connected to the AMP PCB ASSY.

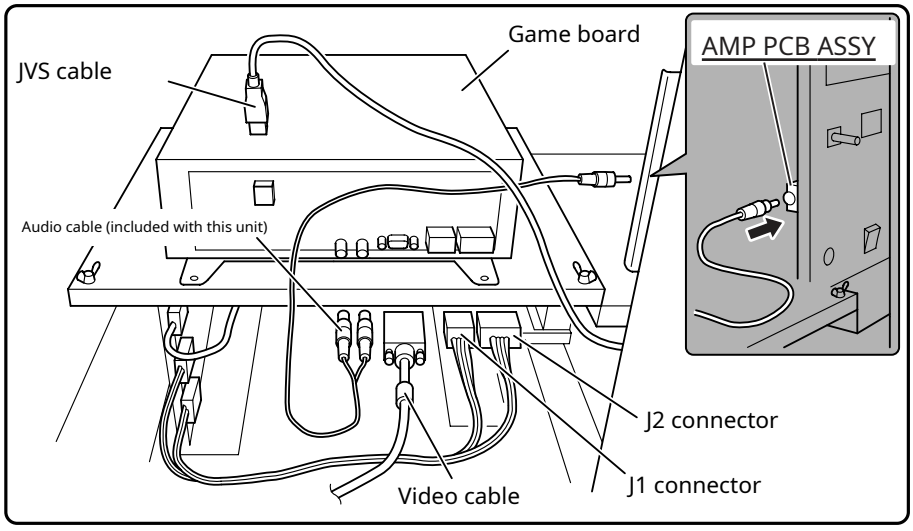

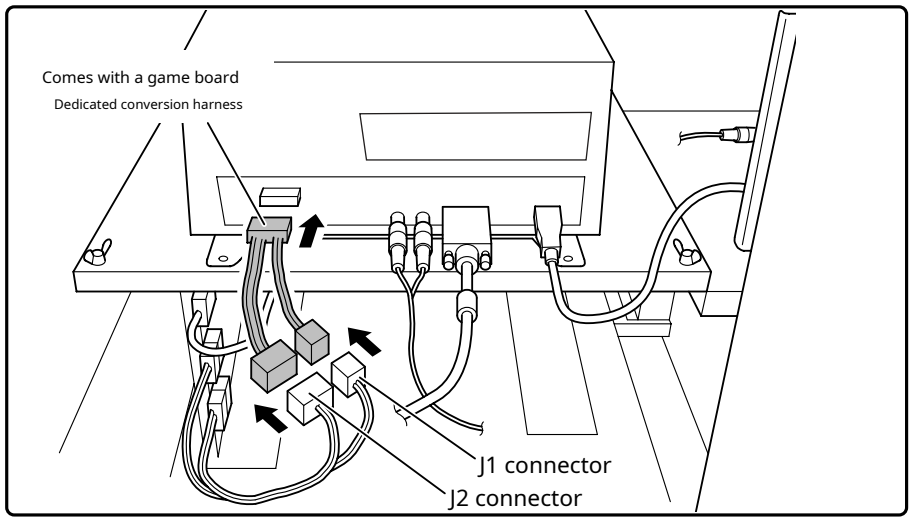

HARD CANDY ハードキャンディ WWW.HARD-CANDY.COM

■ 4-4. How to remove and replace parts

caveat

- Only store maintenance personnel and technicians can perform the removal work. In addition, never perform any work other than that described in this manual. If you work with non-genuine parts, it will be considered as unauthorized modification. Never modify it. It will be the cause of the failure.
- If you find any damage or malfunction, turn off the power switch of this unit and contact our service department. If the product is operated with damage or malfunction, it may cause a malfunction or accident.

■ Before performing replacement work

Turn off the power switch of this unit before performing replacement work.

Power switch position

The power switch is located inside the rejector door of this unit, at the bottom right.

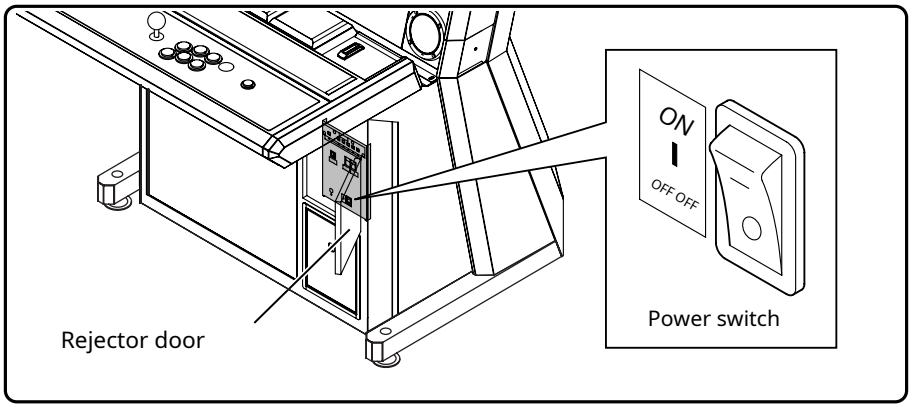

HARD CANDY ハードキャンディ WWW.HARD-CANDY.COM

4-4-1 Control panel replacement

⚠注意

Be sure to turn off the power switch before performing the replacement work.

■ Installation of the control panel for our product "Eaglet 3"

1 Open the ejector door and turn off the power switch. Unlock the control panel with the service key and open it toward you.

2 Disconnect the control panel connectors (2 places). Remove the fixing nuts (8 places) and remove the control panel.

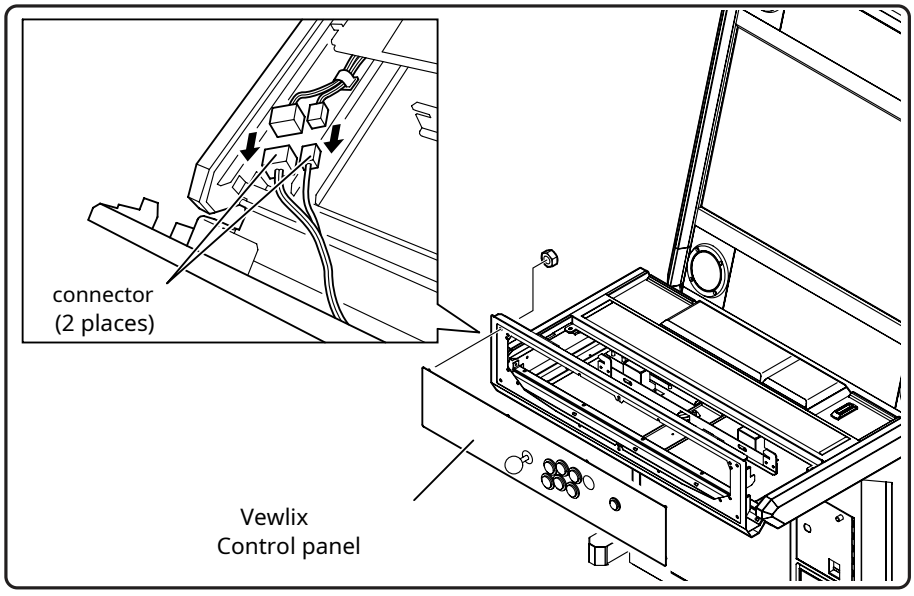

3 Fix the control panel for "Eaglet 3" with the control plate cover L / R (EG3), carriage bolts (6 places) and locknuts (10 places) attached to this unit. [Carriage bolt (chrome): M4X16] 6 places [Locknut (trivalent): M4] 10 places

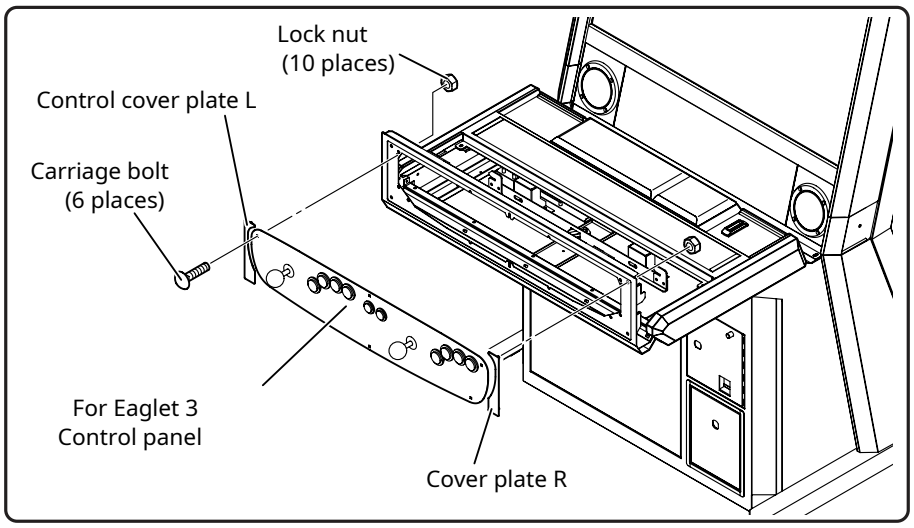

HARD CANDY ハードキャンディ WWW.HARD-CANDY.COM

4 Connect the J / K connector, close the control panel, and lock with the service key.

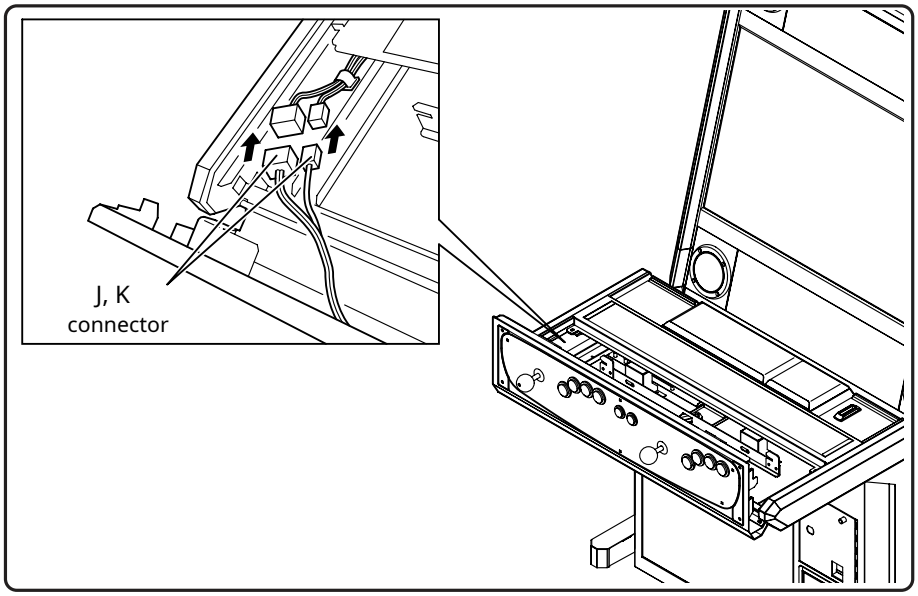

■ Installation of NAOMI CABINET, NET CITY, VERSUS CITY compatible control panel

1 Unlock the control panel with the service key and open it toward you.

2 Disconnect the control panel connectors (2 places). Remove the fixing nuts (8 places) and remove the control panel.

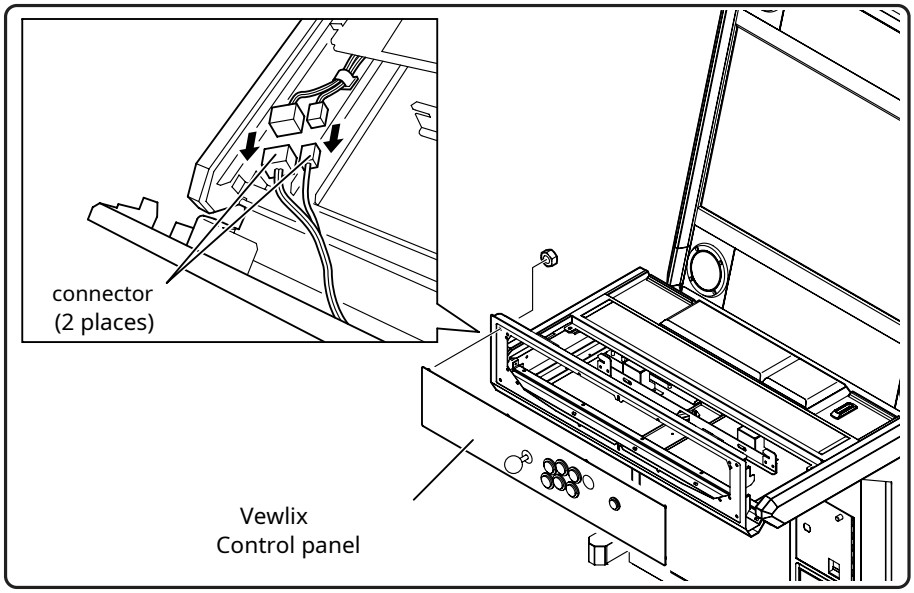

HARD CANDY ハードキャンディ WWW.HARD-CANDY.COM

3 Fix the control panel to be replaced with the control plate cover L / R (SG), carriage bolts (6 places) and locknuts (10 places) attached to this unit.
[Carriage bolt (chrome): M4X16] 6 places [Locknut (trivalent): M4] 10 places

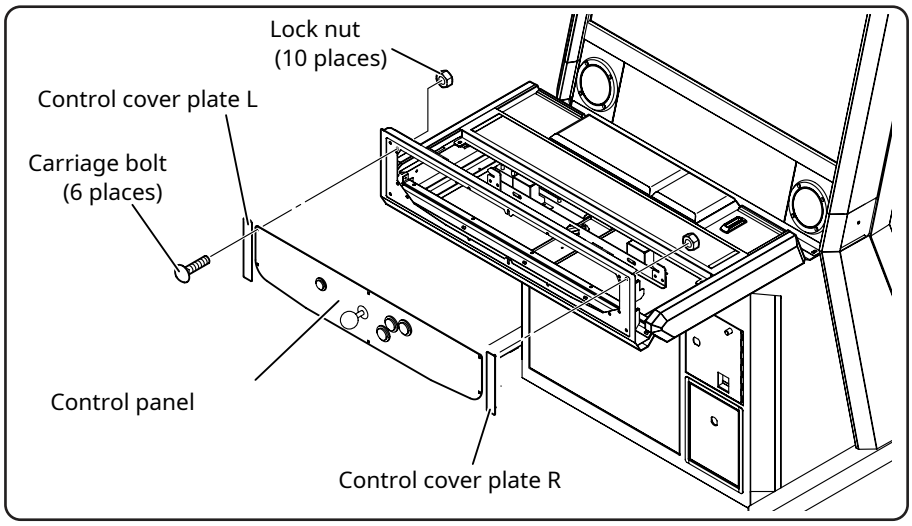

4 Connect the S panel harness that comes with this unit between the control panel and this unit, and connect it to each connector.

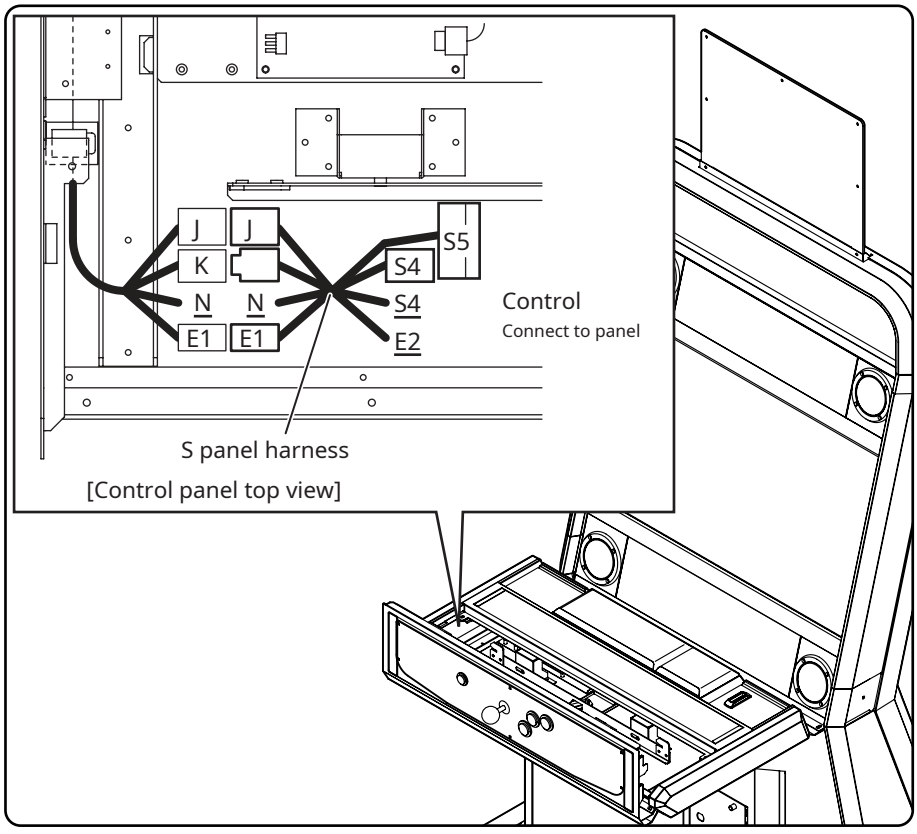

5 Close the control panel and lock with the service key.

HARD CANDY
ハード キャンディ
WWW.HARD-CANDY.COM

4-4-2 Replacing the joystick and push button

⚠注意

Be sure to turn off the power switch before performing the replacement work.

■ **Replacement of each button**

1. Open the ejector door and turn off the power switch.
2. Unlock the control panel with the service key and open it toward you.
3. From the back of the control panel, remove the terminal of the push button to be replaced, and pull it up while pressing the claw on the side of the push button.
4. If you change the number of push buttons, insert the button cover that comes with this unit.

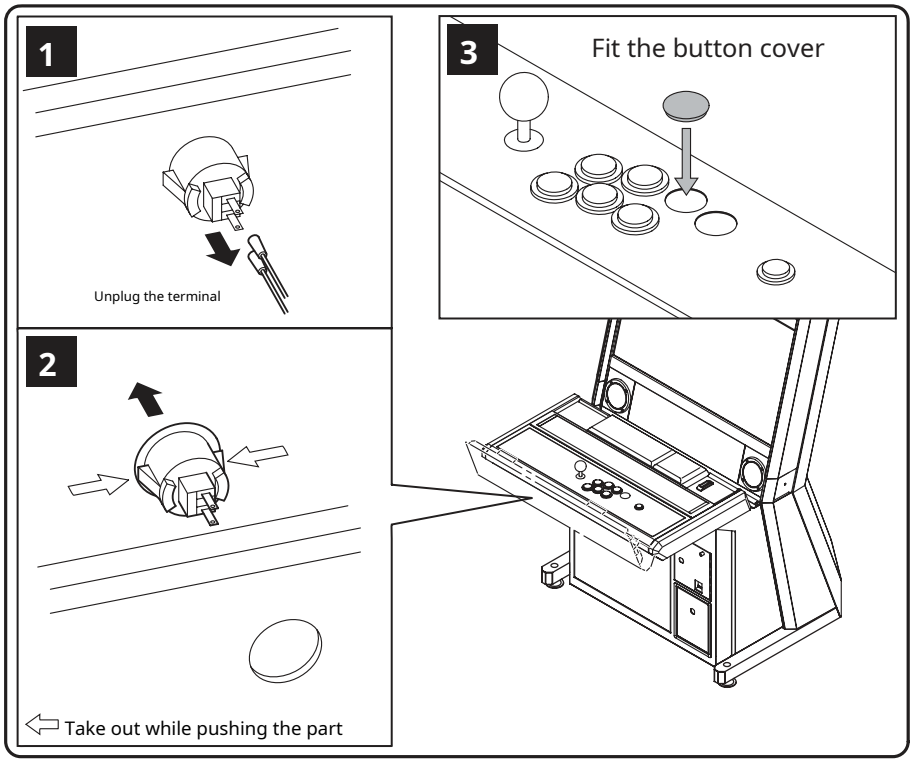

■ Replacing the joystick

1. Open the ejector door and turn off the power switch.
2. Unlock the control panel with the service key and open it toward you.
3. From the back of the control panel, disconnect the joystick connector (one place).
4. Remove the E-ring on the shaft and remove each part.
5. Remove the fixing nuts (4 places) on the joystick bracket. [Locknut U (trivalent): M4] 4 places
6. Remove and remove the screws and nuts (2 places each) that secure the joystick. [Sems screw (W)-(trivalent): M4x15] 2 places [Locknut U (trivalent): M4] 2 places

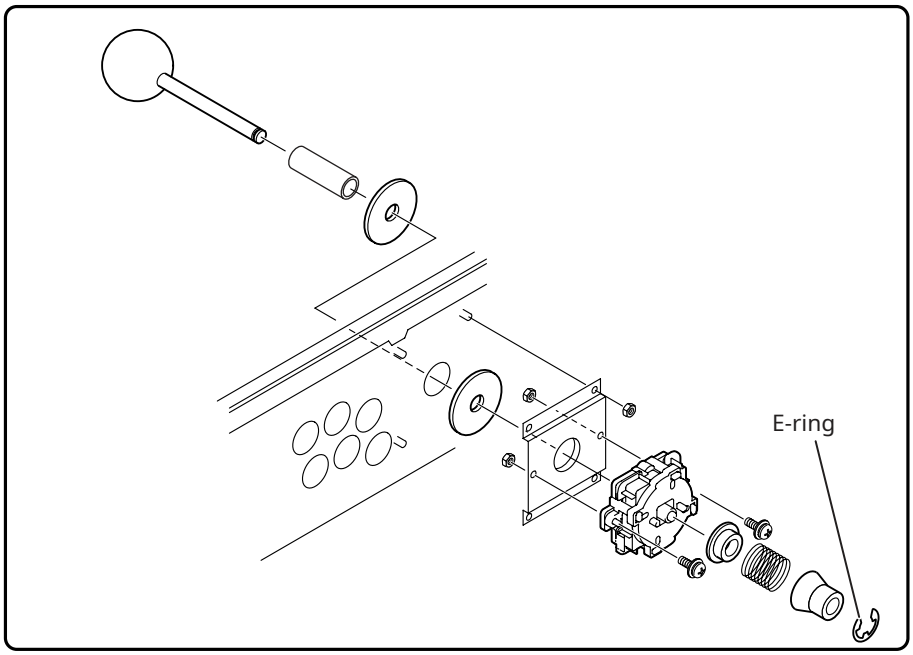

HARD CANDY ハード キャンディ WWW.HARD-CANDY.COM

4-4-3 Replacing the rejector

⚠注意

Be sure to turn off the power switch before performing the replacement work.

1 Open the ejector door and turn off the power switch.

2 Remove the wing bolt and remove the ejector plate.
Remove the ejector while tilting it sideways.
[Butterfly bolt (trivalent): M4x10] 1 place

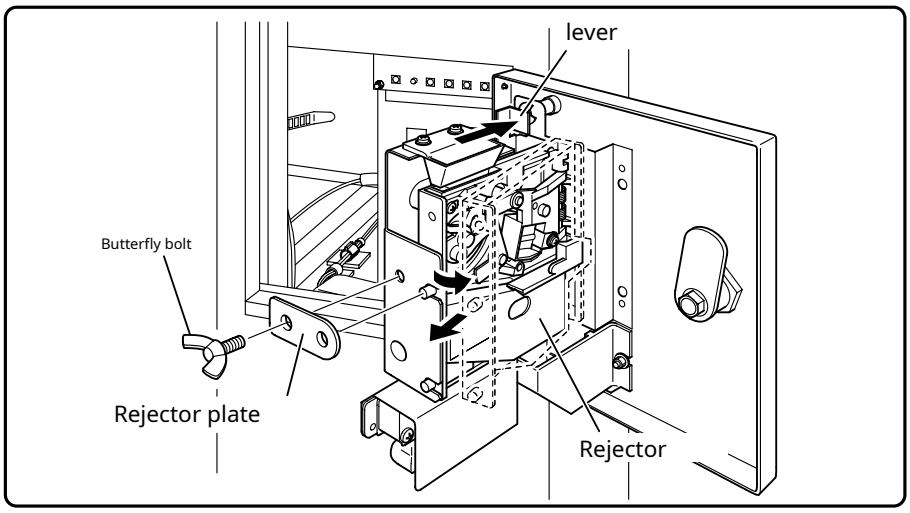

3 When fitting the ejector, push the lever in the direction of the arrow to fit it.

HARD CANDY ハードキャンディ WWW.HARD-CANDY.COM

4-4-4 Replacement of various boards

⚠注意

Be sure to turn off the power switch before performing the replacement work.

■ Replacing the AMP PCB ASSY

1 Open the ejector door, turn off the power switch, and unplug the power plug from the outlet.

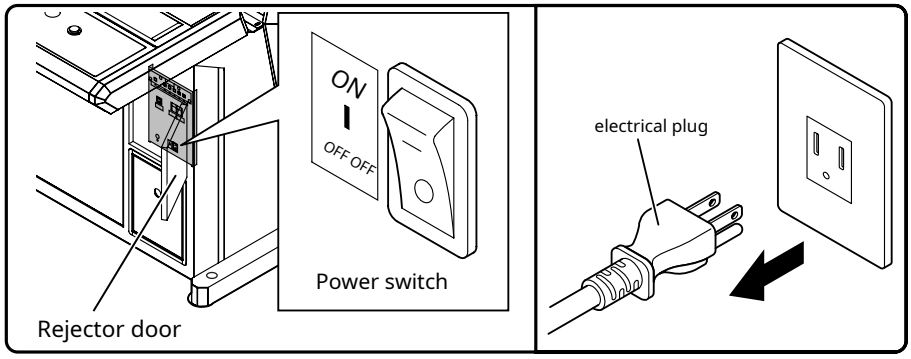

2 Remove the back door (lower), remove the connectors (3 places) and nuts (4 places) connected to the AMP PCB ASSY, and remove the AMP PCB ASSY.
[Flange nut (trivalent): M3] 4 places
[Plastic spacer: 3.2x7x10] 4 places

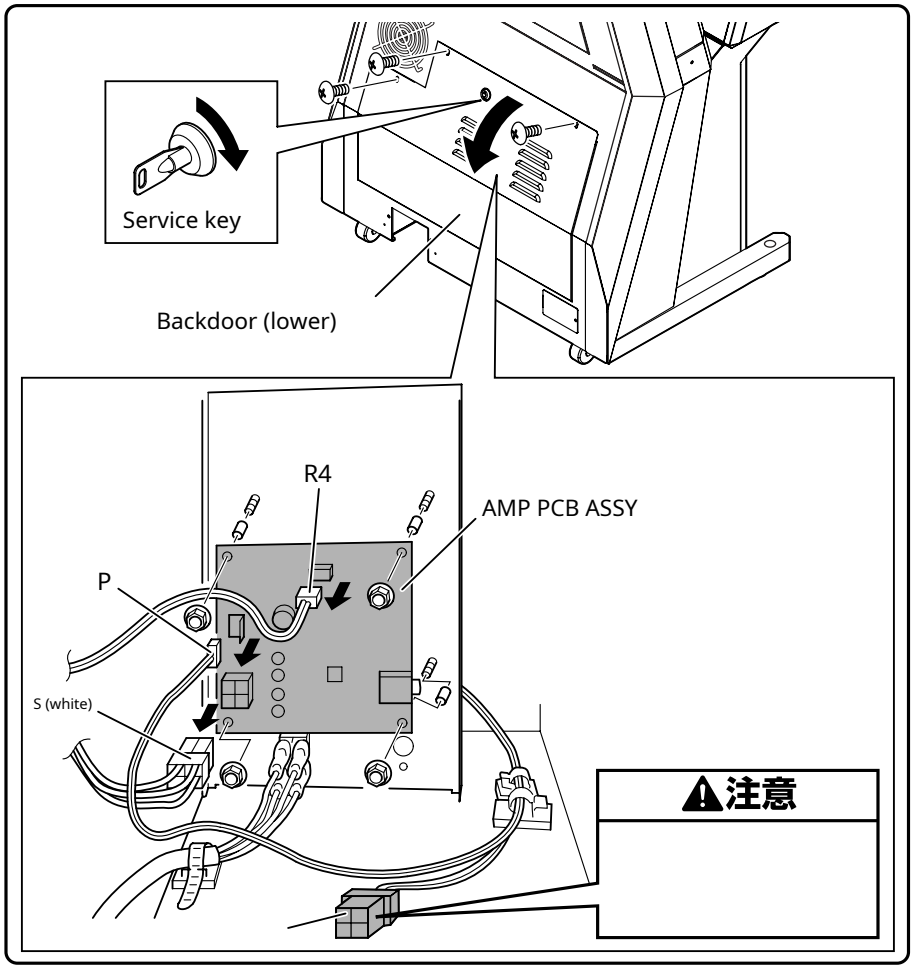

-Only when the optional "Buurix JVS Board" is installed-

⚠注意

Be sure to turn off the power switch before performing replacement work. Please.

■ Replacing the JVS PCB ASSY

1 Open the ejector door and turn off the power switch.

2 Open the control panel toward you with the service key. Remove the screws (2 places) and remove the control cover (rear).

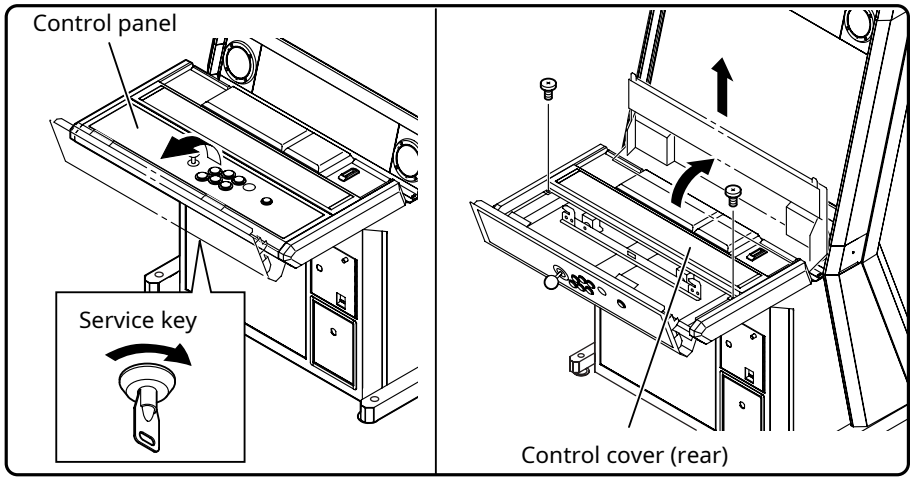

3 Remove the connectors (3 places), JVS cable, and wing nut, and remove the JVS PCB ASSY together with the JVS PCB base.[Bing nut (trivalent: M3] 1 place

4 Remove the JVS PCB ASSY from the JVS PCB base. [Sems screw (W)-(trivalent): M3x8] 4 places

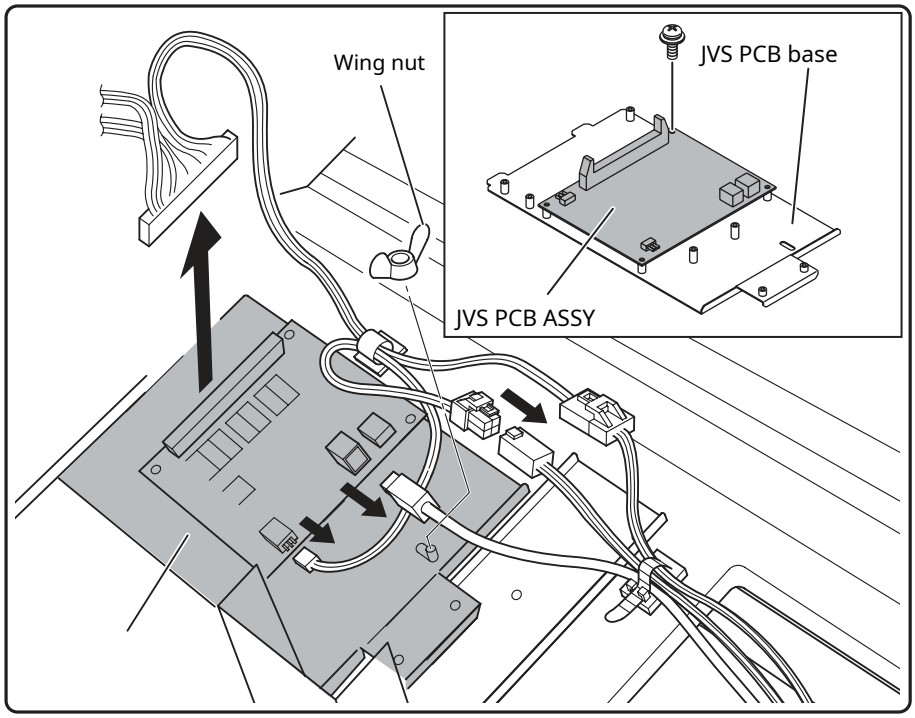

HARD CANDY ハードキャンディ WWW.HARD-CANDY.COM

4-4-5 Fuse replacement

⚠注意

Be sure to turn off the power switch and unplug the power plug from the outlet before performing the replacement work.

1 Open the ejector door, turn off the power switch, and unplug the power plug from the outlet.

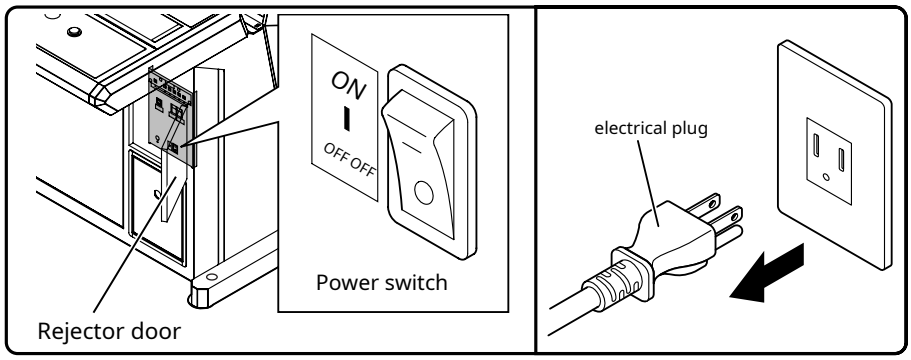

2 Remove the fuse cover at the bottom left of the back of the machine with a screwdriver (+), remove the fuse, and replace it.

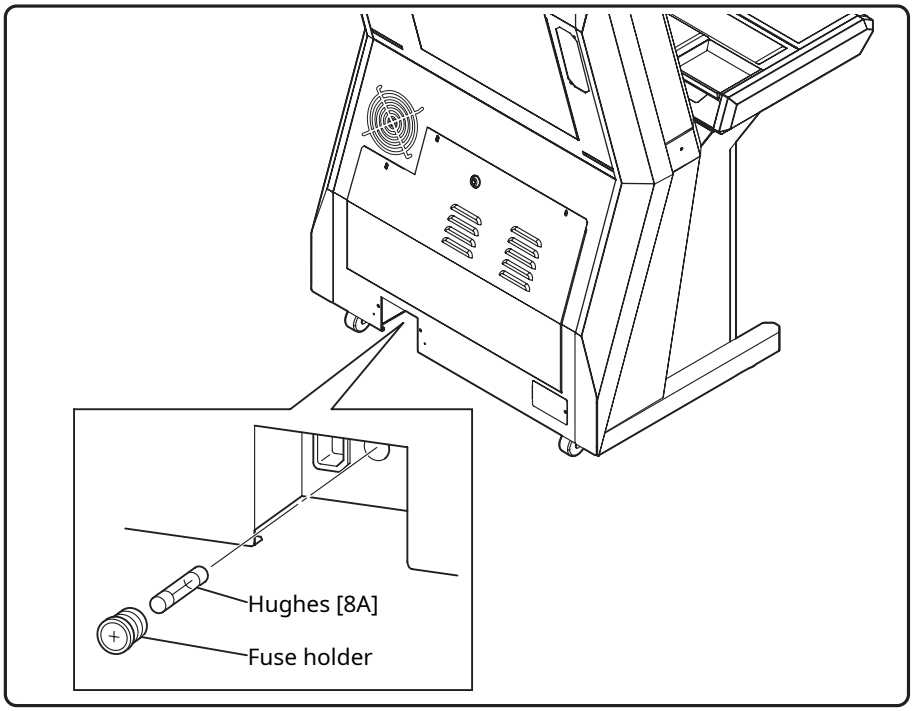

HARD CANDY ハードキャンディ WWW.HARD-CANDY.COM

■ 4-5. Adjusting the LCD monitor

4-5-1 About adjustment of LCD monitor

The screen adjustment of the LCD monitor is performed by the adjuster inside the ejector door.

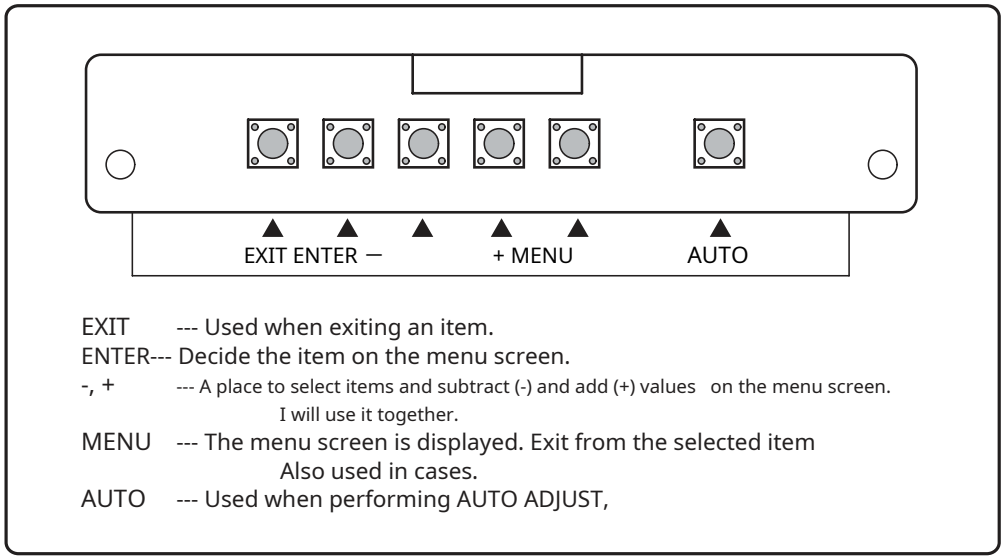

EXIT --- Used when exiting an item.
ENTER--- Decide the item on the menu screen.
-, + --- A place to select items and subtract (-) and add (+) values on the menu screen.
I will use it together.
MENU --- The menu screen is displayed. Exit from the selected item
Also used in cases.
AUTO --- Used when performing AUTO ADJUST,

Supported RGB signal timing

MODE	Dclk (MHz)	fH (kHz)	fV (Hz)
1920x1080	148.50	67.500	60.000
1360x768	84.43	47.539	59.573
1280x1024 (SXGA)	108.00	63.981	60.020
1280x768 (W-XGA)	79.70	47.897	60.021
1280x720 (720P)	74.25	45.000	60.000
1024x768 (XGA)	64.94	48.318	59.948
1024x600 (W-SVGA)	49.20	37.500	60.096
800x600 (SVGA)	40.05	37.926	60.392
800x480 (W-VGA)	29.55	29.788	59.577
640x480 (VGA)	25.18	31.475	59.952

■ About AUTO ADJUST

Press AUTO to display the AUTO ADJUST start confirmation screen. Press "ENTER" to do AUTO ADJUST, or "EXIT" to not do it.

* AUTO ADJUST is performed by "Cross Hatch" in the test mode of the game board. Please.

HARD CANDY ハードキャンディ WWW.HARD-CANDY.COM

4-5-2 How to adjust the LCD monitor

1 Press the MENU button to display the menu screen.

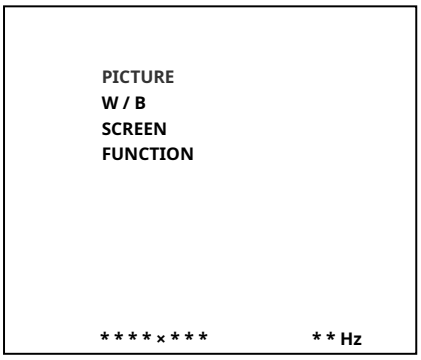

2 Use the + and-buttons to select, increase or decrease the value, and the ENTER button to confirm. Press the EXIT button to exit the item.

重　要

The LCD monitor is best adjusted at the factory. If you change the adjustment value unnecessarily, it may not be displayed correctly.

■ **Menu details**

PICTURE

BRIGHT ・・・・・・・・・00 (-50 ～ 50)
CONTRAST ・・・・・100 (0 ～ 100)
SAHRPNESS ・・・・0 (0-3)

W / B

W / B MODE ・・・・・9300k (6500k, 9300k) 9300k ・
・・・・・・・・・All items 00 (-50 ～ 50) 6500k ・・
・・・・・All items 00 (-50 ～ 50)

SCREEN

H.POSI ・・・・・・・・・00 (-50 ～ 50)
V.POSI ・・・・・・・・・00 (-50 ～ 50)
CLOCK ・・・・・・・00 (-50 ～ 50)
PHASE ・・・・・・・・・00 (-50 ～ 50)

FUNCTION

VEW MODE ・・・・・NOR (FULL, ASP, NOR) "Factory default setting to ASP"
AGS ・・・・・・・・・MODE2 (MODE1, MODE2) ・・
OSD ・・・・・・・OFF (ON, OFF)
X768 ・・・・・・・・・VESA (VESA, GAME)
RESET ・・・・・・・NO (ON, OFF)

HARD CANDY ハードキャンディ WWW.HARD-CANDY.COM

■ 4-6. Rotation of LCD monitor

⚠注意

- Before rotating the LCD monitor, be sure to turn off the power switch and unplug the power plug from the concentric.
- When rotating the LCD monitor, use two or more people. Failure to do this will cause the LCD monitor to fall, resulting in damage or injury.

1 Open the ejector door, turn off the power switch, and unplug the power plug from the outlet.

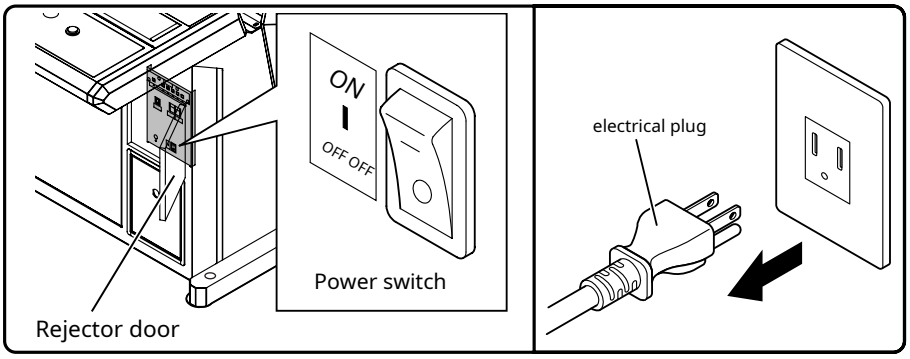

2 Open the control panel toward you with the service key. Remove the screws (2 places) and remove the control cover (rear). * If NESiCAxLive is installed, connect the USB cable to the RFID R / W unit.

Remove it from the ASSY and store it in the hole of the control panel assembly. Also, remove the RFID power harness from the FAST I / O AMP PC board.

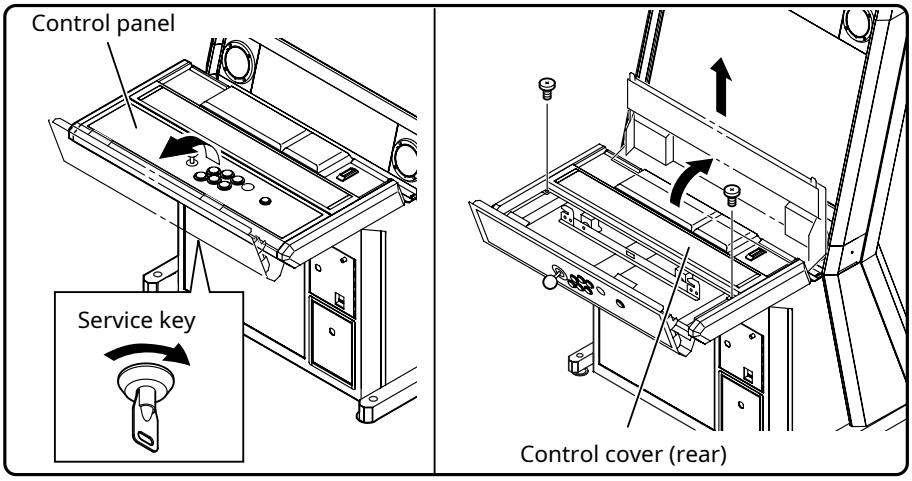

Incorporates NESiCAxLive
Work required if

RFID R / W unit assembly wiring diagram

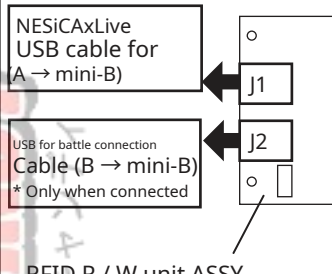

RFID power harness wiring diagram

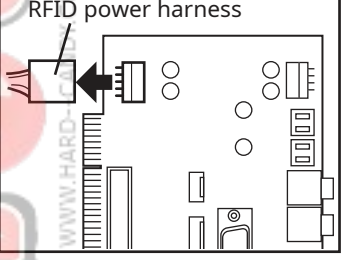

3 Disconnect the connectors (2 places) connected inside the control panel assembly and the LAN cable or JVS cable. Remove the harness from the clamp and store it in the hole. * The optional Burix JVS board or NESiCAxLive is installed.
If not, this is not necessary.

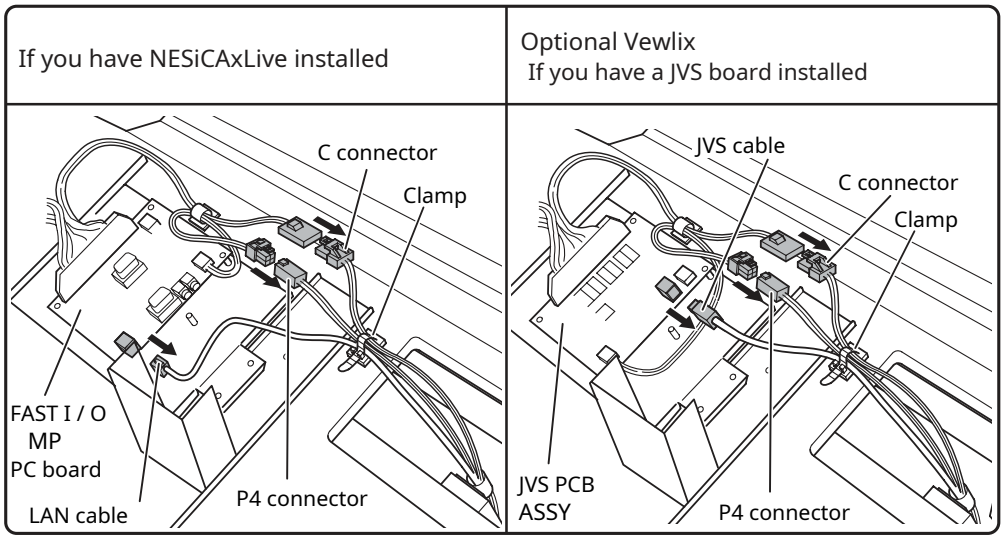

4 Remove the front side (2 places) of the control panel assembly fixing bolts and loosen the rear side (2 places). Push the control panel assembly to the back and remove it up.
[Sems Upset Bolt (W) Trivalent: M6x20]

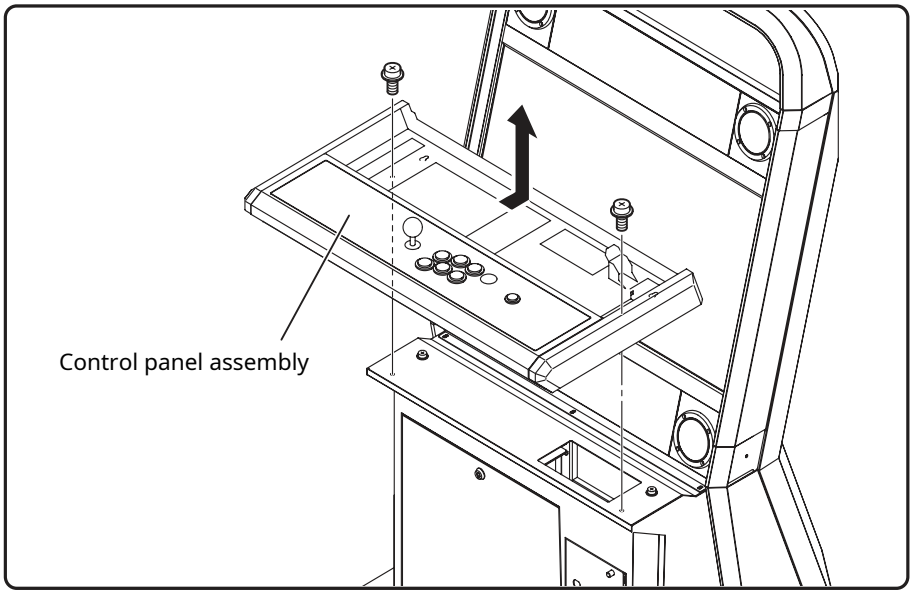

HARD CANDY ハードキャンディ WWW.HARD-CANDY.COM

5 Remove the screws (2 places) and remove the back door (upper). Disconnect the monitor cable, electron microscope harness, and connector that are connected internally, and pull it out.

[Trust screw (chrome) : M4x8] 2 places

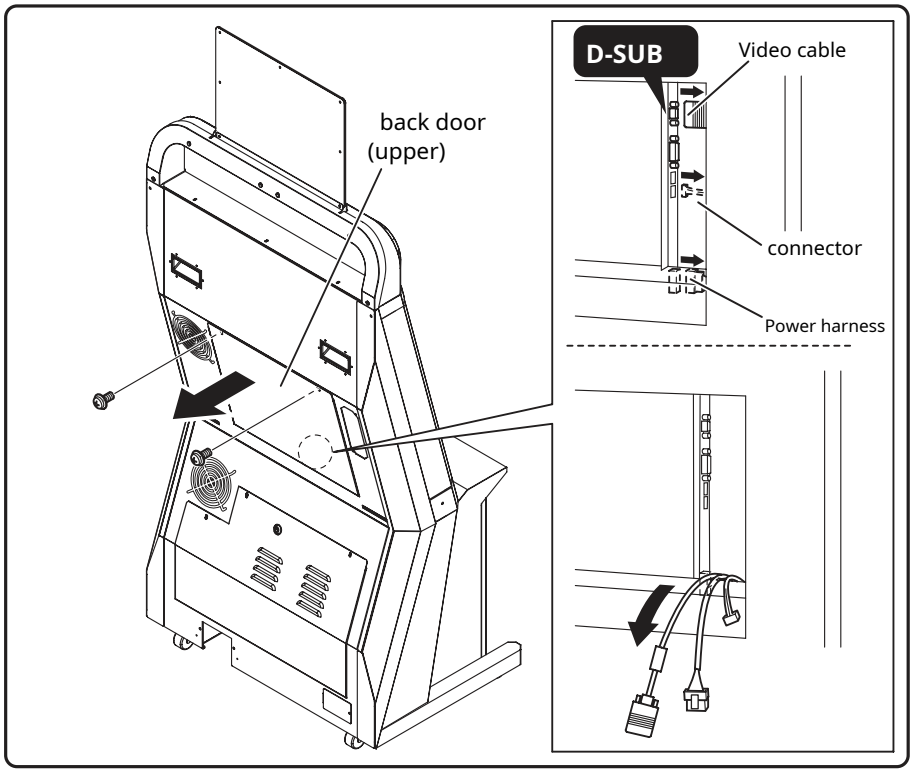

6 Remove the top side cover L / R, and remove the side cover ASSY L / R. Top side cover [Trust screw (chrome): M4x35] 2 places Side cover ASSY upper side [Sems screw (W) trivalent: M4x6] 2 places Side cover ASSY lower side [Bind low head screw (stainless steel): M4x6] 2 places

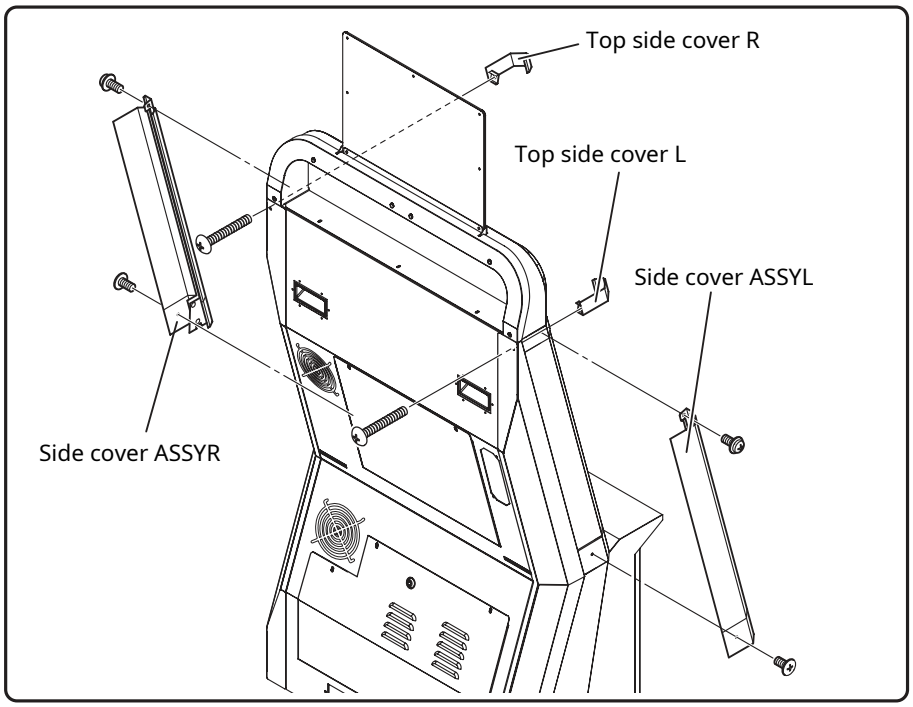

HARD CANDY ハードキャンディ WWW.HARD-CANDY.COM

7 Remove the screws (3 places) and remove the front stopper (upper). [Truss screw (trivalent black): M4x8] 3 places

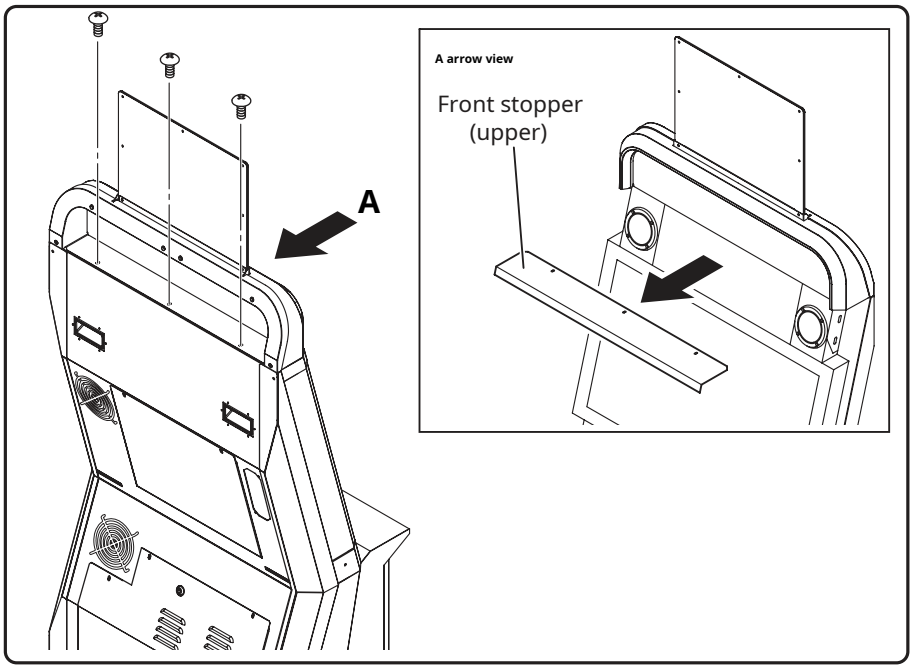

8 Loosen the upper speaker fixing screws (2 places each), slide the speaker up, and tighten the fixing screws.

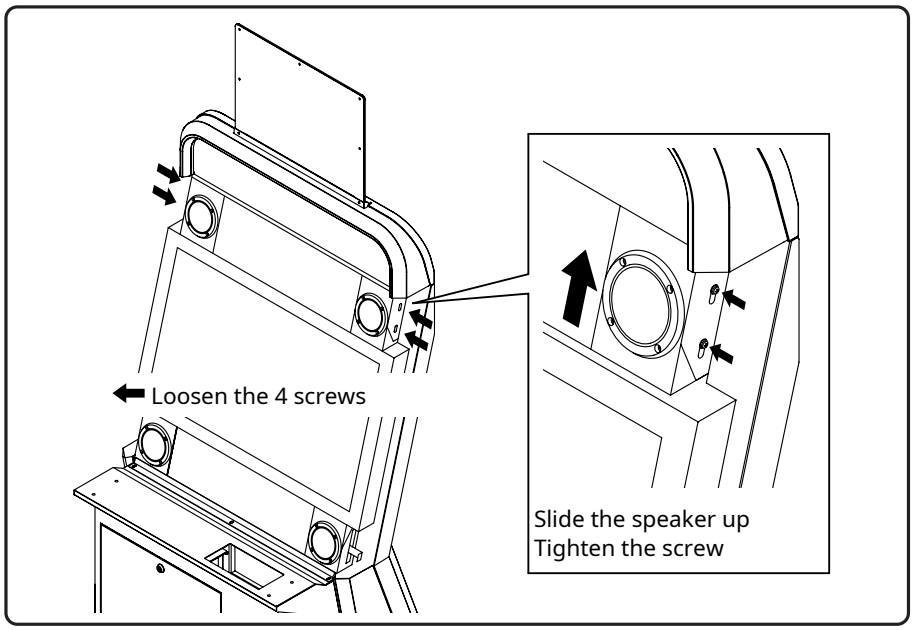

HARD CANDY ハードキャンディ WWW.HARD-CANDY.COM

⚠注意

Be sure to have two or more people remove the LCD monitor.

9 Remove the bolts (4 places) on the back, and be sure to remove the LCD monitor with two or more people.[Sems upset screw (W) trivalent: M6x10] 4 places

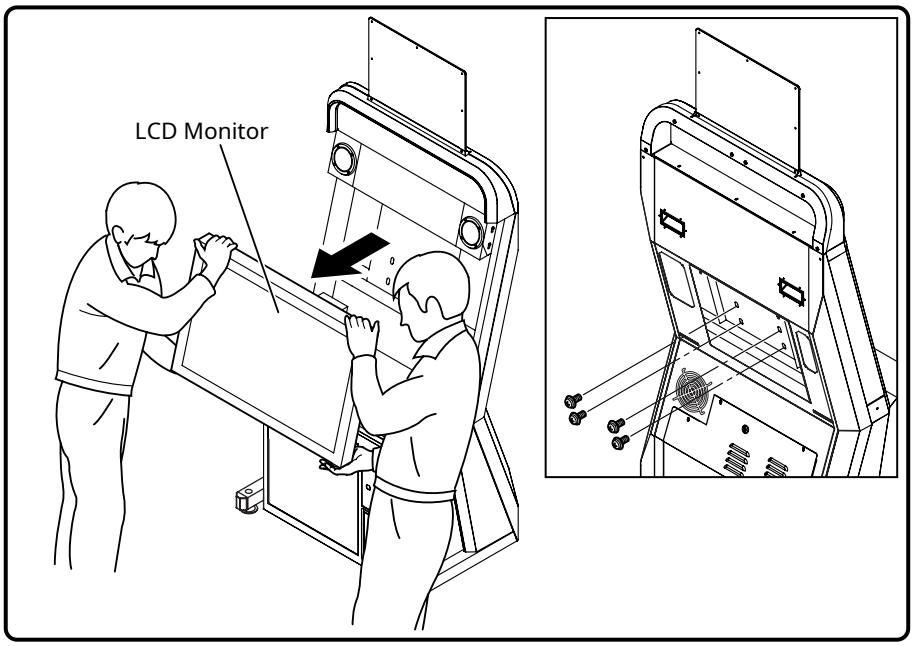

10 Remove the screws (3 places) and remove the front stopper (lower). [Truss screw (trivalent black): M4x8] 3 places

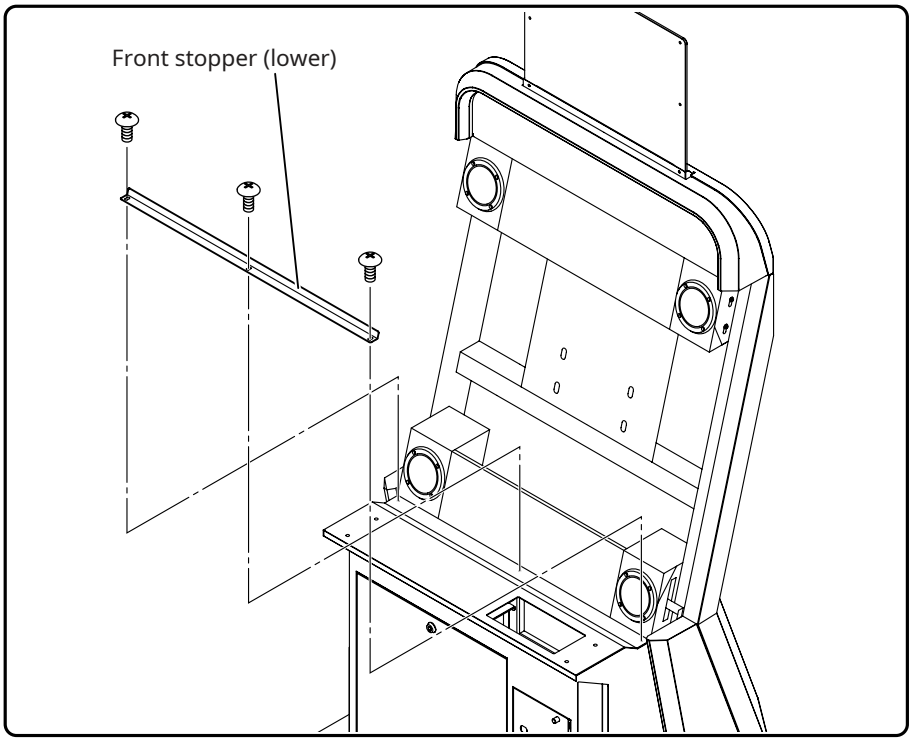

HARD CANDY ハードキャンディ WWW.HARD-CANDY.COM

11 Remove the wing bolts (4 places each) and remove the space plate base. [Butterfly bolt (trivalent): M4x16] 4 places each

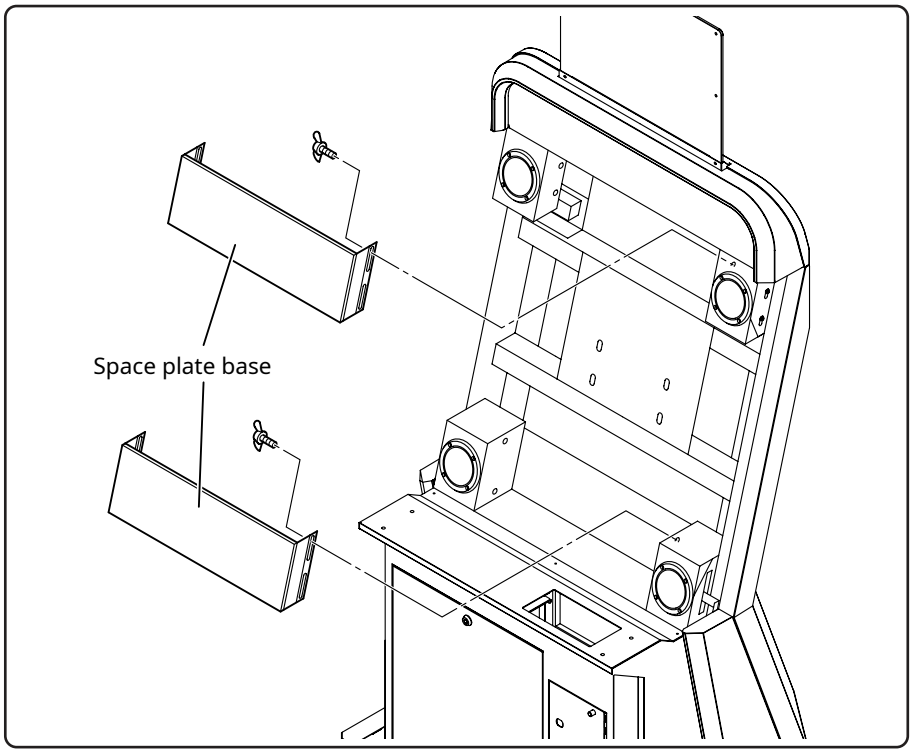

12 Attach the space plate base with wing bolts as shown. After installation, loosen the screws on the upper speaker, lower the speaker, and fully tighten it. [Butterfly bolt (trivalent): M4x16] 4 places each

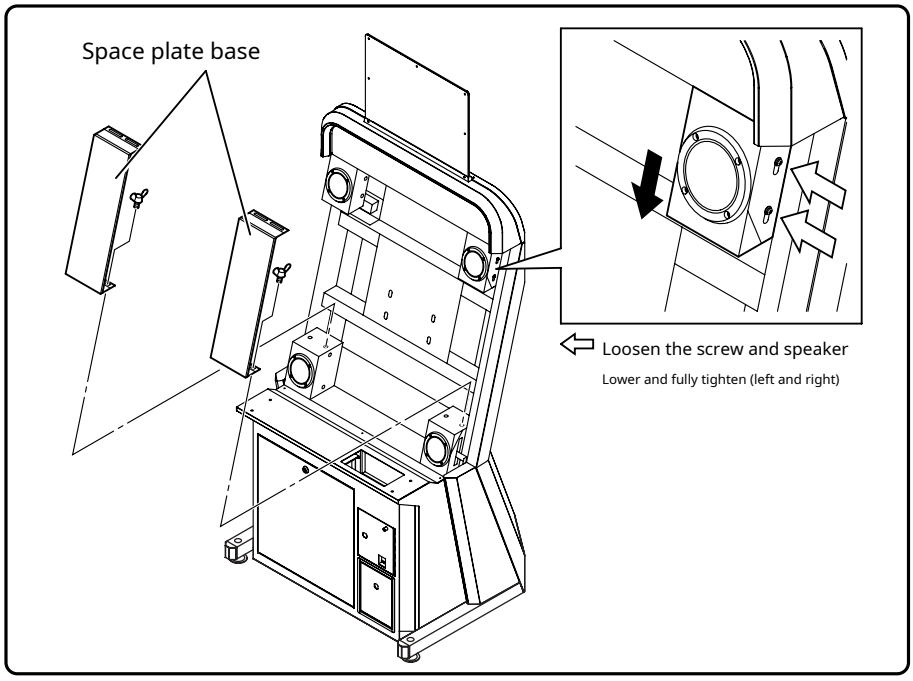

HARD CANDY ハードキャンディ WWW.HARD-CANDY.COM

⚠注意

Be sure to have two or more people install the LCD monitor.

13 Two people have an LCD monitor,Connector connection facing downPlace it towards. Fix with bolts (4 places).

[Sems upset screw (W) trivalent: M6x10] 4 places

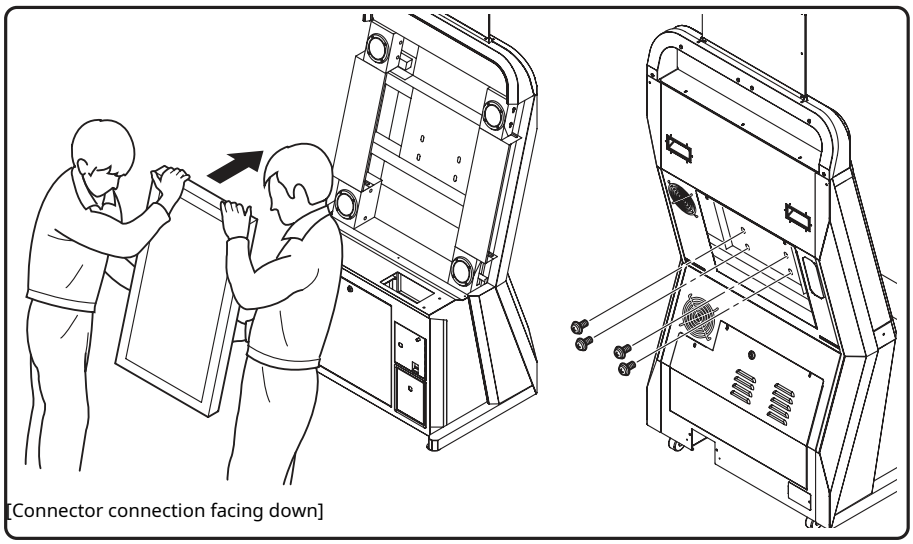

[Connector connection facing down]

14 Attach the front stopper (lower) with the screws (3 places). [Truss screw (trivalent black): M4x8] 3 places

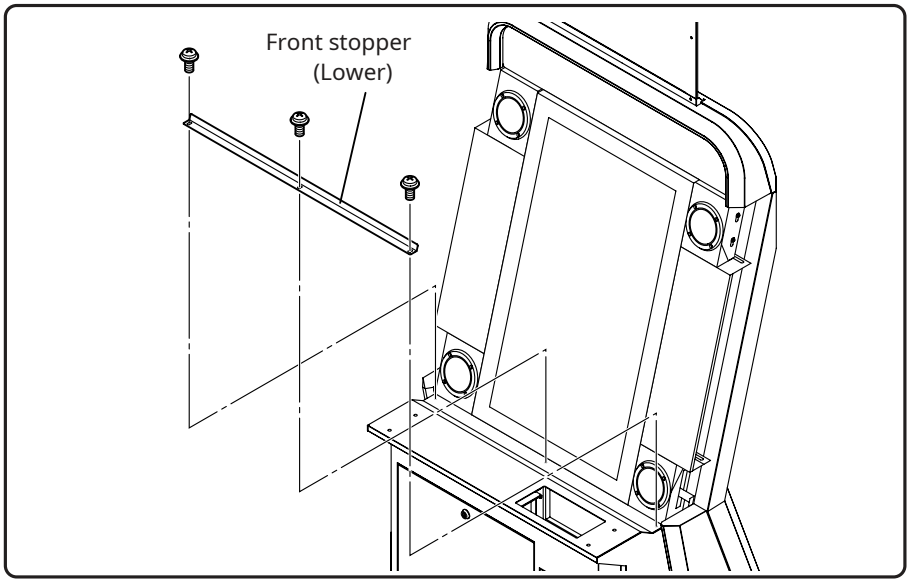

HARD CANDY ハードキャンディ WWW.HARD-CANDY.COM

15 Install the side cover ASSY L / R and the top side cover L / R. Side cover assembly upper side [Sems screw (W) trivalent: M4x6] 2 places Side cover assembly lower side [Bind low head screw (stainless steel): M4x6] 2 places Top side cover [Truss screw (chrome): M4x35] 2 places

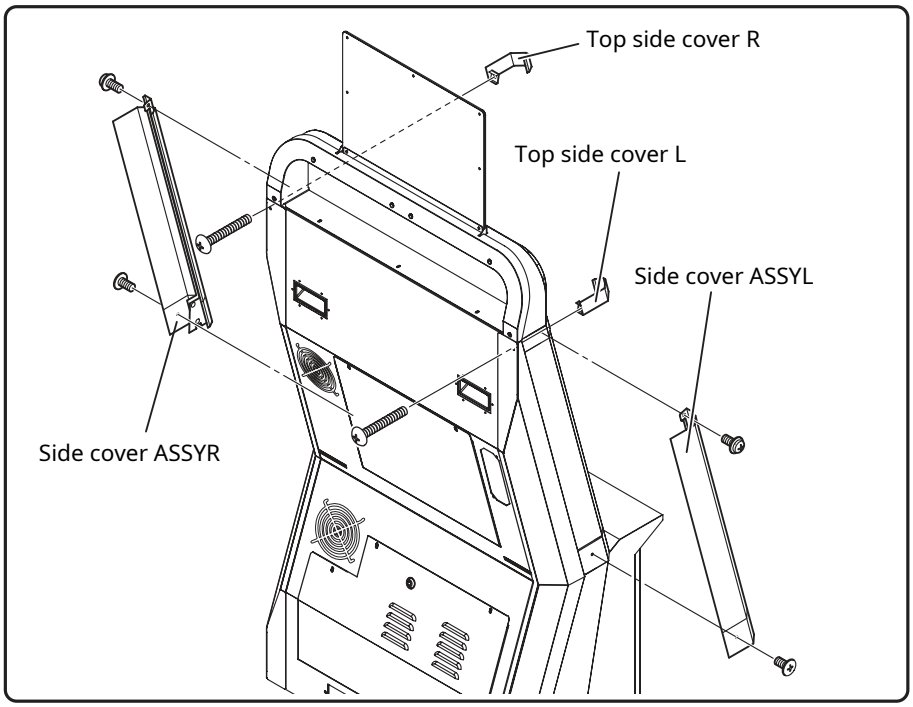

16 Remove the screws (3 places) and attach the front stopper (upper). [Truss screw (trivalent black): M4x8] 3 places

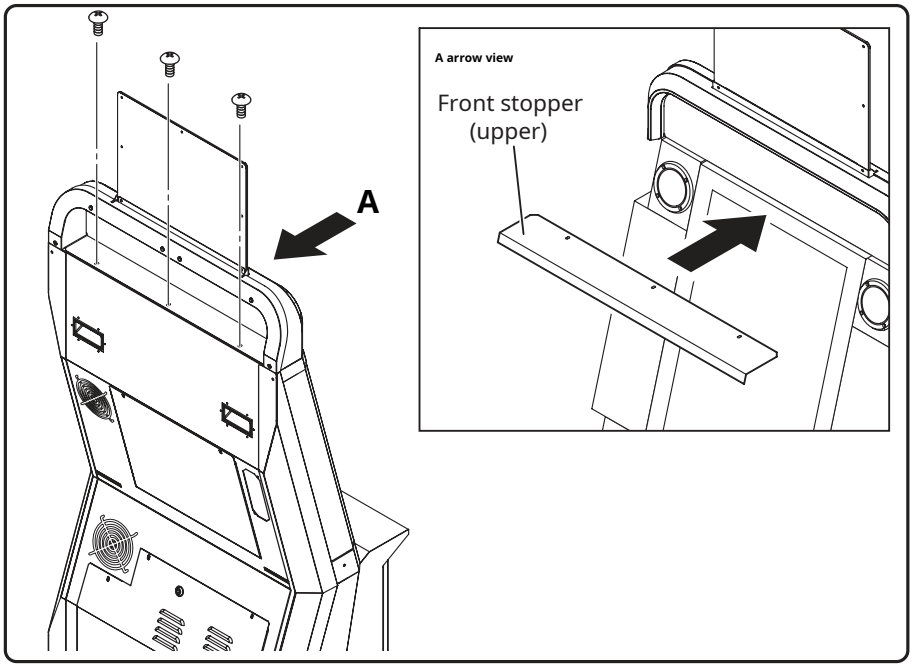

HARD CANDY ハードキャンディ WWW.HARD-CANDY.COM

17 Connect the accessory AC joint harness to the power harness connected to the LCD monitor.

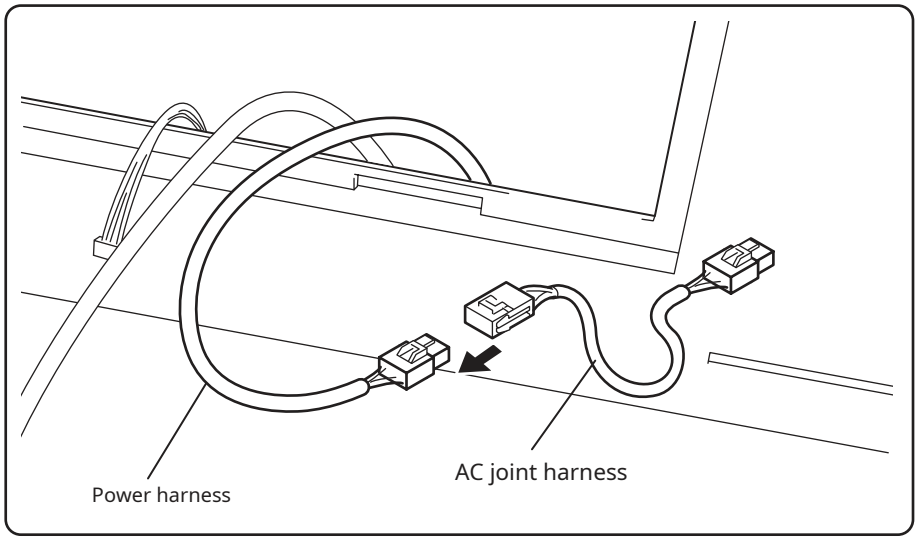

18 Connect the monitor cable, connector, and AC joint harness connected to the power supply harness to the LCD monitor. Please install the back door (upper).

[Trust screw (chrome) : M4x8] 2 places

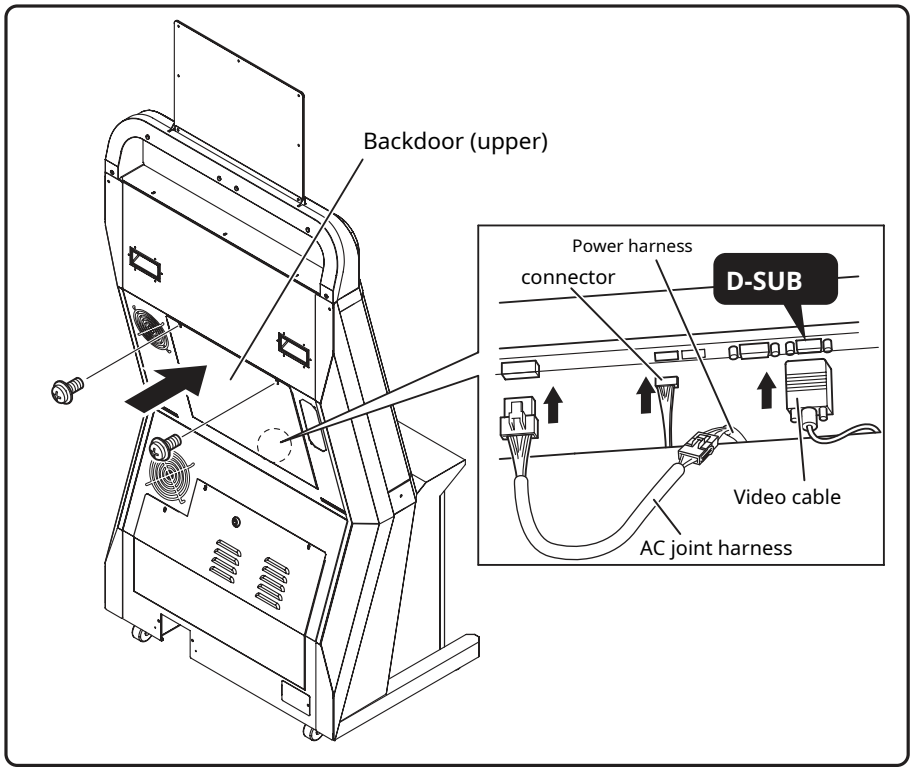

HARD CANDY ハードキャンディ WWW.HARD-CANDY.COM

■ 4-7. Fixing the control panel assembly

⚠注意

When re-transporting the machine, be sure to fix the control panel assembly with the shipping bracket. Failure to do this may cause an unexpected accident.

1 Open the ejector door and turn off the power switch.

2 Open the control panel toward you with the service key. Remove the screws (2 places) and remove the control cover (rear). * If NESiCAxLive is installed, use the RFID R / W unit ASSY to USB.

Unplug the cable and store it in the hole in the control panel assembly. Also, remove the RFID power harness from the FAST I / O AMP PC board.

Incorporates NESiCAxLive
Work required if

RFID R / W unit assembly wiring diagram

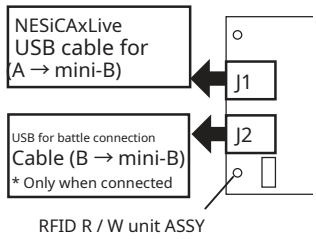

RFID power harness wiring diagram

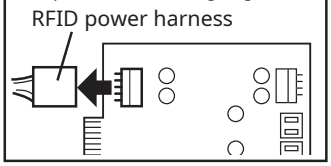

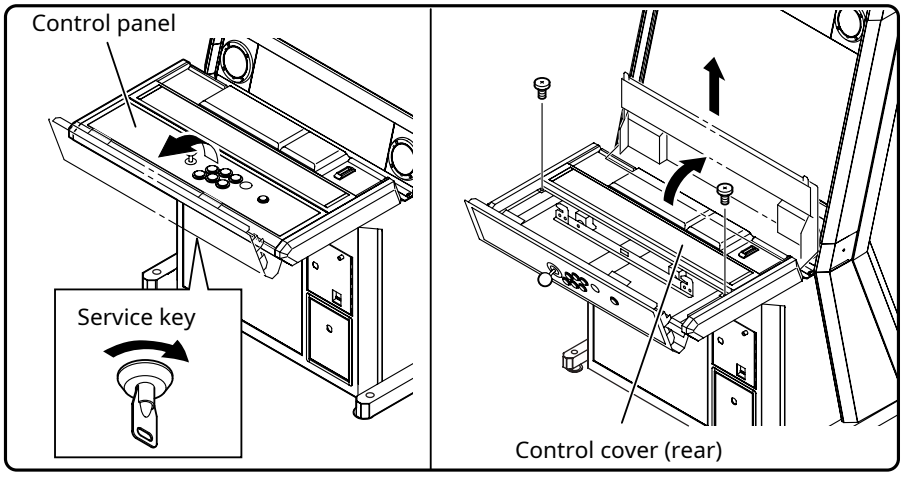

3 Remove each connector (P4 / C) and JVS cable or LAN cable, and store them in the holes.

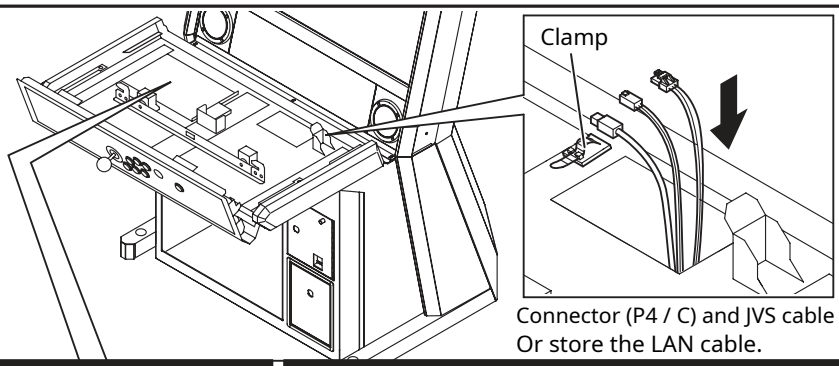

If you have NESiCAxLive installed

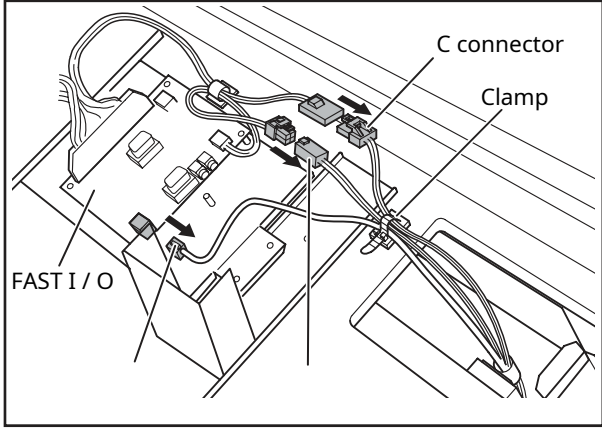

Optional Vewlix
If you have a JVS board installed

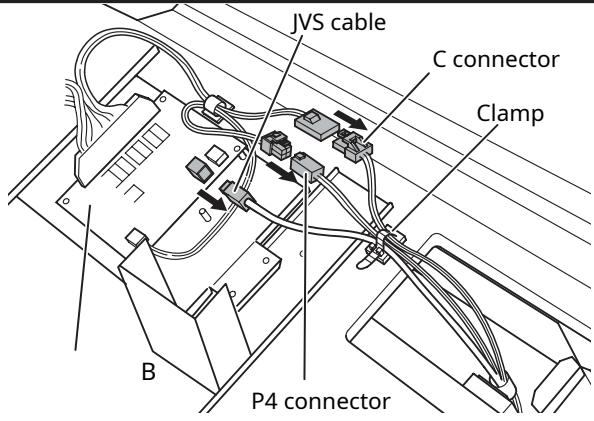

HARD CANDY ハードキャンディ WWW.HARD-CANDY.COM

4 Remove the bolts (2 places) on the front side that fix the control panel assembly, and loosen the bolts (2 places) on the back side. Slide the control panel assembly to the back and remove it. Remove the bolts (2 places) left on the machine.

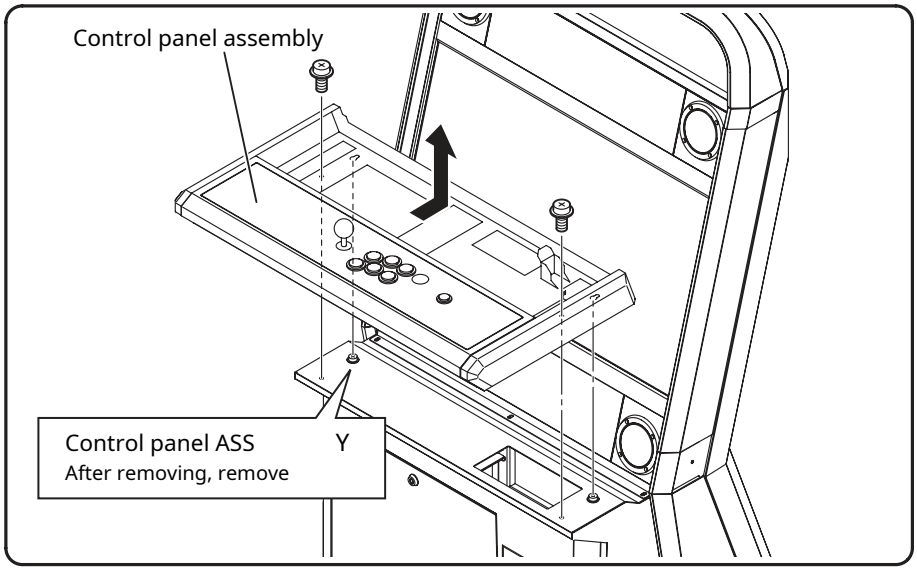

5 Attach the shipping bracket to this machine.
[Sems Upset Bolt (W) Trivalent: M6x20] 4 places

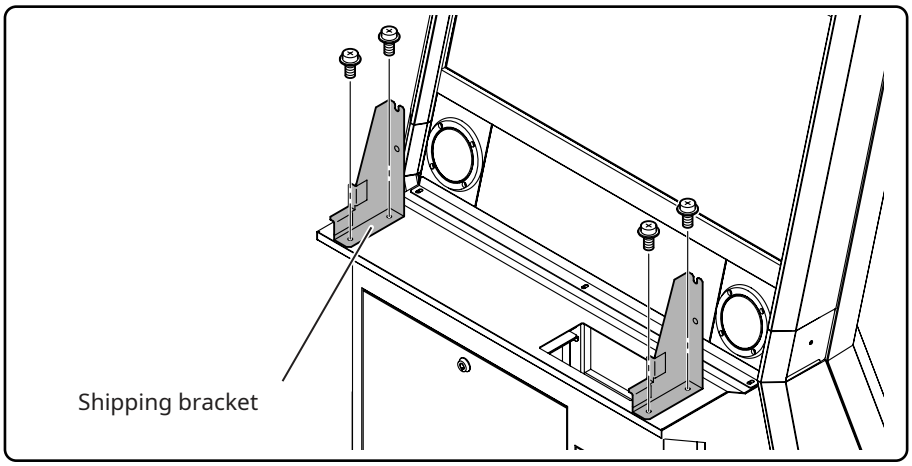

6 Insert the bolts (2 places) on the back side of the control panel assembly. After that, temporarily tighten the bolts (fix two bolts).[Sems Upset Bolt (W) Trivalent: M6x20] 4 places

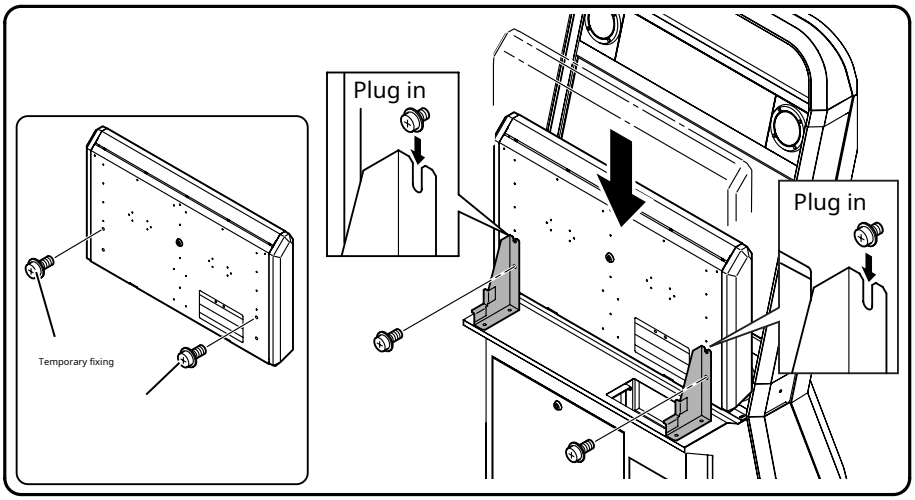

■ 4-8. Simple troubles and countermeasures

trouble	Possible causes	handle
can not turn on	● The power plug can be removed from the outlet or this unit. Isn't it missing?	● Connect the power plug to this unit or an outlet Please plug it in.
	● Is the power switch turned off?	● Turn on the power switch.
	● Is the fuse blown?	● Replace the fuse.
There is no image	● The LCD monitor is turned off. Senka	● Check the connector connection of the LCD monitor please.
	● For LCD monitors or game boards Is the video cable connected?	● Connect the video cable.
I can't hear the sound	● Volume adjustment is now low volume Senka	● Adjust the volume appropriately.
	● Is the audio cable connected?	● Connect the audio cable to the AMP PCB ASSY or game board.
Button or Joyste I can't operate	● Control the I / O board prepared separately The G connector in the roll panel assembly Not connected.	● Check the connector connection on the I / O board. please.
	● Control plate harness and housing Harness is not connected.	● Connect the harness of the control plate Please continue.

HARD CANDY ハード キャンディ WWW.HARD--CANDY.COM

Chapter 5 Disposal

■ 5-1. Disposal

When disposing of the housing or parts, the owner of this machine is responsible for handling it as industrial waste.

Packing material

At the time of shipment, this machine is protected by packing materials.

Please dispose of the packing materials according to the sorting method according to the area.

Replacement parts

Dispose of items that are no longer needed after replacing parts using a sorting method that suits the area.

HARD CANDY ハードキャンディ WWW.HARD-CANDY.COM

■ 5-2. Main component material list

part number	Part name	Material	Classification
C0300022L	ACTUATOR- (ROHS)	SUS304-WPB	metal
D2001972B	SPEAKER BOX	MDF	wood
D2002015A	NOISE FILTER BASE	MDF	wood
D2002016A	PCB BASE BOARD	MDF	wood
D2002047A	UPPER SPEAKER BOX	MDF	wood
E1000928A	CANCEL ROD	SGD290	metal
E1002359A	SPACER	Brass	metal
E1004572A	LCD SPACER-L	SGD400	metal
E1004573A	LCD SPACER-S	SGD400	metal
E3017618A	MS COIN GUIDE-A	SUS430	metal
E3017619A	MS COIN GUIDE-B	SUS430	metal
E3018242A	ACTUATOR COVER	Electrogalvanized steel sheet	metal
E3018243A	CANCEL LEVER	Electrogalvanized steel sheet	metal
E3018299A	REJECTOR PLATE	Electrogalvanized steel sheet	metal
E3018346C	COIN CHUTE-A	Electrogalvanized steel sheet	metal
E3018347B	COIN CHUTE-B	Electrogalvanized steel sheet	metal
E3018348A	COIN ENTRY PLATE-(100YEN-C)	SUS430	metal
E3018349A	CONNECTOR PLATE	Electrogalvanized steel sheet	metal
E3018350A	JOYSTICK BRACKET	Electrogalvanized steel sheet	metal
E3018351A	JVS PCB BASE	Electrogalvanized steel sheet	metal
E3018353A	LATCH SLIDER	Electrogalvanized steel sheet	metal
E3018354A	LATCH WASHER	Electrogalvanized steel sheet	metal
E3018355A	LED PCB BASE	Electrogalvanized steel sheet	metal
E3018357A	LOCK PLATE	SPCC	metal
E3018358A	LOCK PLATE-(CONTROL PANEL)	Electrogalvanized steel sheet	metal
E3018359A	MIDDLE COVER SUPPORT-L	Electrogalvanized steel sheet	metal
E3018360A	MIDDLE COVER SUPPORT-R	Electrogalvanized steel sheet	metal
E3018361A	OUTLET BRACKET-2P	Electrogalvanized steel sheet	metal
E3018362B	REJECTOR HOLDER	Electrogalvanized steel sheet	metal
E3018364A	SIDE COVER BASE-L	Electrogalvanized steel sheet	metal
E3018365A	SIDE COVER BASE-R	Electrogalvanized steel sheet	metal
E3018366A	SIDE COVER LOWER BRACKET-L	Electrogalvanized steel sheet	metal
E3018367A	SIDE COVER LOWER BRACKET-R	Electrogalvanized steel sheet	metal
E3018369A	SPACE PLATE BRACKET	Electrogalvanized steel sheet	metal
E3018371A	TOP COVER BRACKET-L	Electrogalvanized steel sheet	metal
E3018372A	TOP COVER BRACKET-R	Electrogalvanized steel sheet	metal
E3018375A	MIDDLE COVER GUIDE-L	Electrogalvanized steel sheet	metal
E3018376A	MIDDLE COVER GUIDE-R	Electrogalvanized steel sheet	metal
E3018472A	SHUTTER-N	Electrogalvanized steel sheet	metal
E3018834A	WASHER	Electrogalvanized steel sheet	metal
E3018888A	LOCK PLATE-(Z LOCK)	SPCC	metal
E3019427A	LATCH	Electrogalvanized steel sheet	metal
E3019428A	LOCK BRACKET	Electrogalvanized steel sheet	metal
E3019429A	SHIPPING BRACKET	SPCC	metal
E3019430B	SWITCH BOX	Electrogalvanized steel sheet	metal
E3020360A	CENTRAL BRACKET	Electrogalvanized steel sheet	metal
E3101470A	GUARD COVER	SPCC	metal

HARD CANDY ハードキャンディ WWW.HARD-CANDY.COM

part number	Part name	Material	Classification
E3101522B	MIDDLE SIDE COVER-L	SUS430	metal
E3101523B	MIDDLE SIDE COVER-R	SUS430	metal
E3101525B	TOP SIDE COVER-L	SUS430	metal
E3101526B	TOP SIDE COVER-R	SUS430	metal
E3102110A	CONTROL PLATE-(1J7B)	SUS430	metal
E3102129A	FRONT STOPPER-(LOWER)	Electrogalvanized steel sheet	metal
E3102130A	FRONT STOPPER-(UPPER)	Electrogalvanized steel sheet	metal
E3102131A	INSTRUCTION BRACKET	Electrogalvanized steel sheet	metal
E3102132A	INSTRUCTION STAND	Electrogalvanized steel sheet	metal
E3102137B	SPACE PLATE BASE	Electrogalvanized steel sheet	metal
E3103007A	BACK DOOR-(LOWER)-(WHITE)	Electrogalvanized steel sheet	metal
E3103008A	BACK DOOR-(UPPER)-(WHITE)	Electrogalvanized steel sheet	metal
E3103009A	CABINET-(WHITE)-(WITH PARTS)	Electrogalvanized steel sheet	metal
E3103010A	CASH BOX- (WHITE)	Electrogalvanized steel sheet	metal
E3103011A	CONTROL BASE- (WHITE)	Electrogalvanized steel sheet	metal
E3103012B	CONTROL COVER-(FRONT)-(SUS)	SUS430	metal
E3103013A	CONTROL COVER-(REAR)-(WHITE)	Electrogalvanized steel sheet	metal
E3103014A	CONTROL PLATE COVER-L-(EG3)-(WHITE)	Electrogalvanized steel sheet	metal
E3103015A	CONTROL PLATE COVER-R-(EG3)-(WHITE)	Electrogalvanized steel sheet	metal
E3103016A	CONTROL PLATE COVER-L- (SG)-(WHITE)	Electrogalvanized steel sheet	metal
E3103017A	CONTROL PLATE COVER-R-(SG)-(WHITE)	Electrogalvanized steel sheet	metal
E3103018A	DISPLAY CARD BRACKET	Electrogalvanized steel sheet	metal
E3103019A	FRONT DOOR- (WHITE)	Electrogalvanized steel sheet	metal
E3103020A	LAN COVER PLATE-(WHITE)	Electrogalvanized steel sheet	metal
E3103021A	LCD FRAME	Electrogalvanized steel sheet	metal
E3103022A	REJECTOR DOOR- (WHITE)	Electrogalvanized steel sheet	metal
E5000678A	KIND LOCK-(LARGE RING)-(ROHS)	C3604BD / SPCC	metal
E5000682A	LOCK & KEY-(SINGLE)-(LY1153)-(ROHS)	ZDC / SPCC	metal
E5000684A	LOCK-(SINGLE)-(LY1153)-(ROHS)	ZDC / SPCC	metal
E5000689A	120MM FAN GUARD- (ROHS)	Mild steel wire	metal
E5060768A	ADJUSTER ADP- (BLACK)	steel	metal
E9001444B	TITLE PIPE	STKM11A	metal
E9001527A	CONTROL HINGE	Electrogalvanized steel sheet	metal
E9100082A	LCD MASK-L	A6063	metal
E9100083A	LCD MASK-S	A6063	metal
E9100165A	DOOR HINGE- (WHITE)	SPCC	metal
E9100166A	LEG-L- (SUS)	SUS304	metal
E9100167A	LEG-R- (SUS)	SUS304	metal
F0100068A	TL CRAMP	PA	resin
F0100087A	CONVEX- (CV-100) (Milky white)	PA	resin
F0100088A	DK CRAMP-(17.5X19)	PA	resin
F0100089A	DK CRAMP-(24X19)	PA	resin
F0100090A	NYLON CRAMP	PA	resin
F0100091A	UL CRAMP	PA	resin
F0100092A	UL CRAMP	PA	resin
F0100092A	UL CRAMP	PA	resin
F0100094A	DK CRAMP	PA	resin

part number	Part name	Material	Classification
F0100095A	DK CRAMP	PA	resin
F9001053A	BUTTON COVER D = 30	PA	resin
F9006283B	PULL	ABS	resin
F9006726A	CANCEL CUP	ABS	resin
F9006850A	RES LOCK	ABS / steel	Resin / metal
F9007032A	SPEAKER COVER	ABS	resin
F9007069B	DUCT SPONGE	EPDM	resin
F9007071A	INSTRUCTION COVER	PET	resin
F9007073A	LATCH SPACER	POM	resin
F9007074A	OUTLET CAP	PP	resin
F9007075A	SHEET-A	PET	resin
F9007077A	WATER GUARD-A	PET	resin
F9007099A	SHEET-B	PET	resin
F9007100A	SPONGE	Neocell	resin
F9007102A	PLASTIC SPACER	POM	resin
F9007139A	SPONGE	EPDM	resin
F9007301A	THERMAL SHIRINKAGE TUBE-(D = 25)	EVA / PE	resin
F9007574A	COIN GUIDE-(POM)	POM	resin
F9007600A	COUNTER COVER	ABS	resin
F9007601A	COUNTER HOLDER	ABS	resin
F9007604A	INSTRUCTION PANEL	PMMA	resin
F9007852A	NYLON GROMMET- (milky white)	PA	resin
F9008174B	PLASTIC SPACER	POM	resin
F9008240A	ASHTRAY STOPPER-(DARK BLUE)	ABS	resin
F9008241A	COIN ENTRY MOLDING-(ROHS)	ABS / brass	Resin / metal
F9008242A	CONTROL SIDE COVER-L-(DARK BLUE)	ABS	resin
F9008243A	CONTROL SIDE COVER-R-(DARK BLUE)	ABS	resin
F9008244A	EXTRA SPACE COVER-L- (DARK BLUE)	ABS / brass	Resin / metal
F9008245A	EXTRA SPACE COVER-R- (DARK BLUE)	ABS / brass	Resin / metal
F9008246B	LCD SPACER PLATE-L	ABS	resin
F9008247B	LCD SPACER PLATE-S	ABS	resin
F9008248A	RUBBER PLATE	Natural rubber	Rubber
F9008249A	RUBBER PLATE	Natural rubber	Rubber
F9008250B	RUBBER PLATE	Natural rubber	Rubber
F9008251B	RUBBER PLATE	Natural rubber	Rubber
F9008252A	SIDE COVER LOWER-L- (BLUE)	ABS	resin
F9008253A	SIDE COVER LOWER-R- (BLUE)	ABS	resin
F9008254A	SIDE COVER-L- (BLUE)	ABS	resin
F9008255A	SIDE COVER-R- (BLUE)	ABS	resin
F9008256A	TOP COVER-(FRONT)-(BLUE)	ABS	resin
F9008257A	TOP COVER-(REAR)-(WHITE)	ABS	resin
F9008264A	HOLE PLUGS- (TAKIGEN)	PA	resin
G1002087A	PATENT STICKER	SS Fujinamer	resin
G1002088A	VOLTAGE WARNING STICKER	PVC	resin
G1002095A	JAMMA STANDARD STICKER	PVC	resin
G1002173A	CAUTION STICKER- (light stimulation)	PVC	resin
G1002673A	CABINET STICKER SHEET-(VEWLIX 4)	High-quality paper	paper

HARD CANDY ハードキャンディ WWW.HARD-CANDY.COM

part number	Part name	Material	Classification
G1501787A	CONNECTOR STICKER SHEET-(TYPE RA)	High-quality paper	paper
G1504540A	SIDE STICKER SHEET	PVC	resin
G4500463A	TITLE PANEL	PMMA	resin
G5500517A	CONTROL STICKER-(1J7B)	PVC	resin
G6000373A	INDICATION STICKER SHEET	PVC	resin
H1005095A	LCD GLASS- (WITH AG COATING)	Tempered glass	Glass
H1005097A	DISPLAY CARD GLASS	Tempered glass	Glass
H4003138A	PACKING SHEET	polyethylene	resin
H4003139A	PARTITION-(BACK)	Cardboard / EPE	Paper / resin
H4003141A	PARTITION-(FRONT)	Cardboard / EPE	Paper / resin
H4003152A	PACKING BAG	polyethylene	resin
H9000792A	PETTEPLE	Steel / sponge	Metal / resin

HARD CANDY ハードキャンディ WWW.HARD-CANDY.COM

Parts catalog

HARD CANDY ハードキャンディ WWW.HARD-CANDY.COM

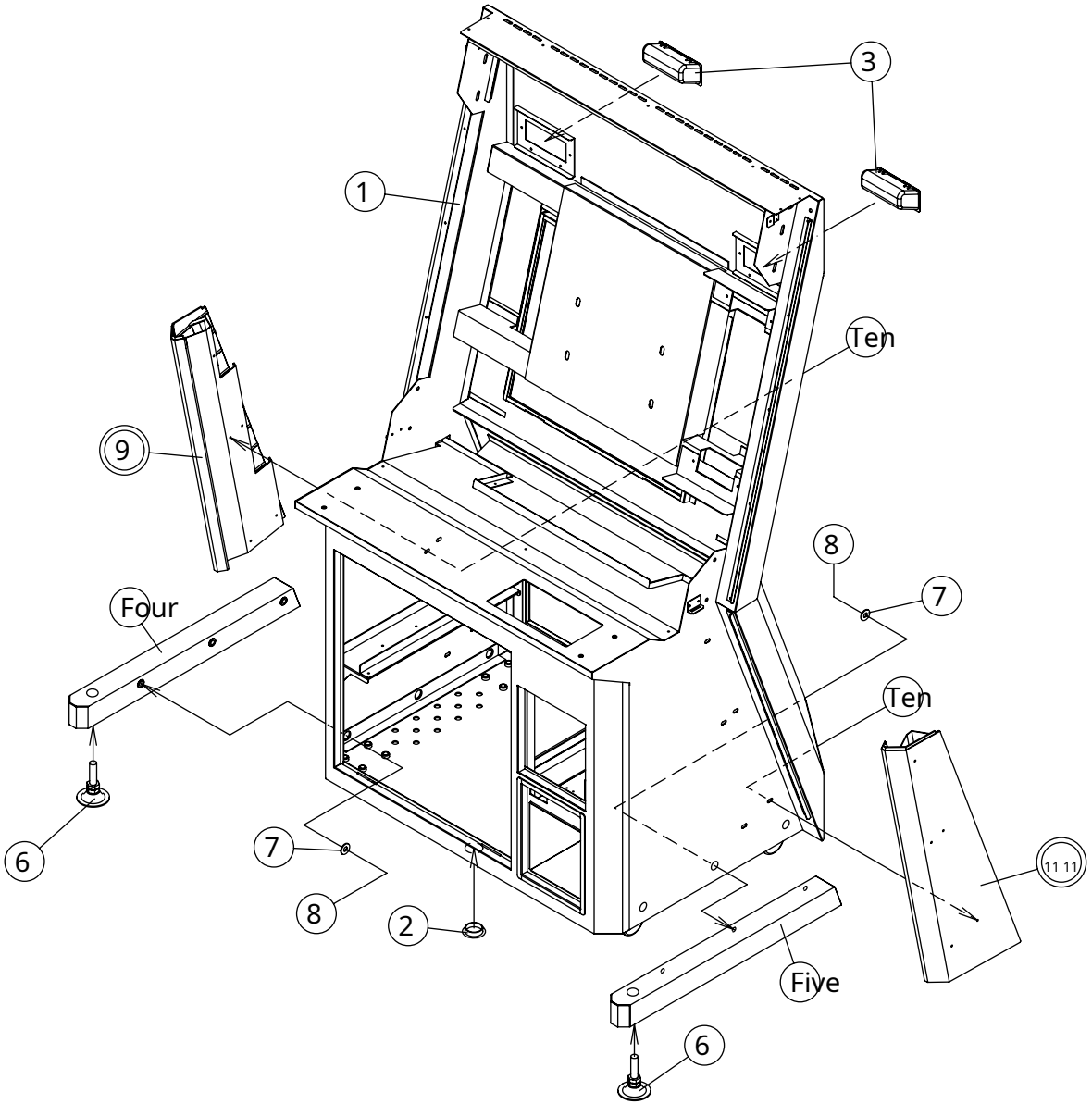

PARTS LIST			
No.	PARTS No.	PARTS LIST	QTY
1	E3103009A	CABINET-(WHITE)-(WITH PARTS)	1
2	F9001053A	BUTTON COVER D = 30 DP-1187-	1
3	F9006283B	BLACK PULL	2
4	E9100166A	LEG-L- (SUS)	1
5	E9100167A	LEG-R- (SUS)	1
6	E5060768A	ADJUSTER ADP- (BLACK) M12X86	2
7	E3018834A	WASHER ZB / 8.5X20X1.6T	6
8		SEMUTH UPSET BOLT-W- (Trivalent)	6
9	M8X20 M9008280A	SIDE COVER LOWER ASSY-L	1
10		PAN HD SEMUTH SCREW-W- (Trivalent)	Ten
11	M4X8 M9008281A	SIDE COVER LOWER ASSY-R	1
12			
13			
14			
15			
16			
17			
18			
19			
20			
21			
22			
23			
24			
25			

CAB

HARD CANDY ハードキャンディ WWW.HARD-CANDY.COM

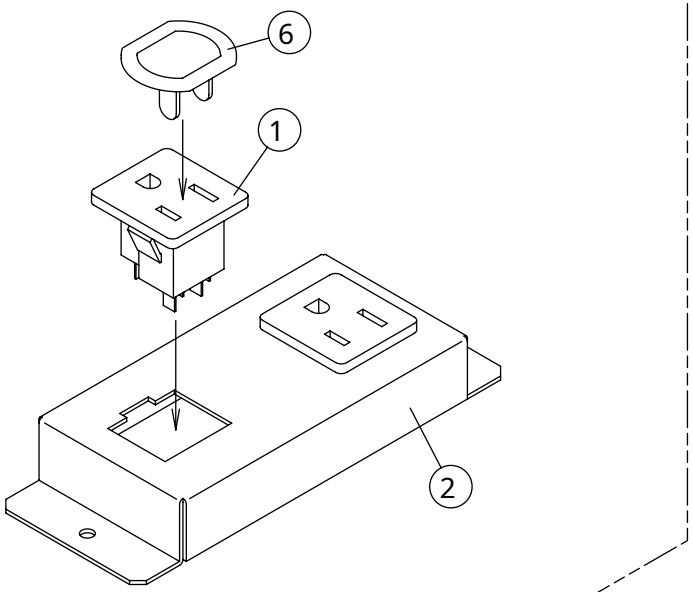

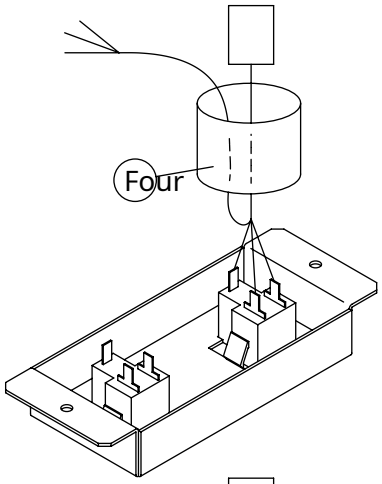

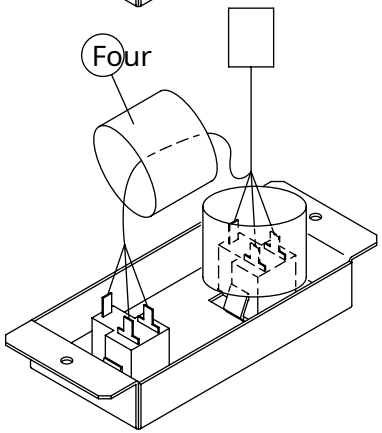

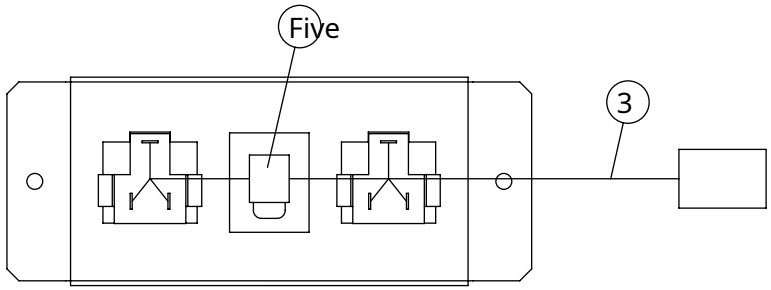

PARTS LIST

No.	PARTS No.	PARTS LIST	QTY
1	C0550633P AC	OUTLET SOCKET-(PBF) M1743	2
2	E3018361A	OUTLET BRACKET-2P	1
3	L9005613B	OUTLET HARNESS	1
4		THERMAL SHIRINKAGE TUBE-(D = 25) RSFR-H VW-1- (25DIA)	0.06
5		DK CRAMP-(17.5X19) TS-0607	1
6	F9007074A	(DKN-5G) OUTLET CAP	1
7			
8			
9			
10			
11			
12			
13			
14			
15			
16			
17			
18			
19			
20			
21			
22			
23			
24			
25			

HARD CANDY ハードキャンディ WWW.HARD-CANDY.COM

CAB

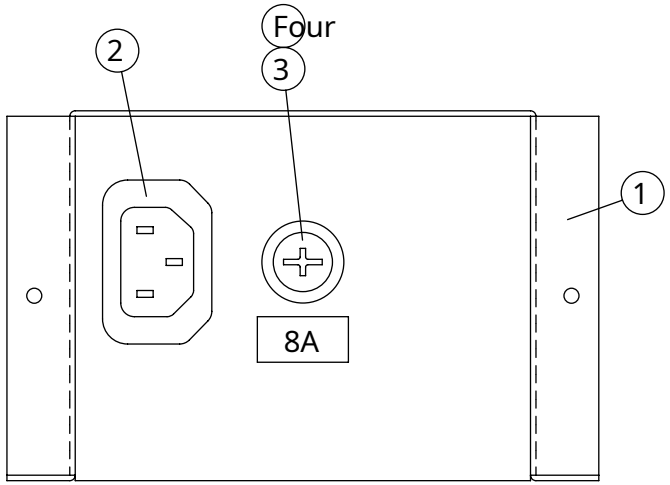

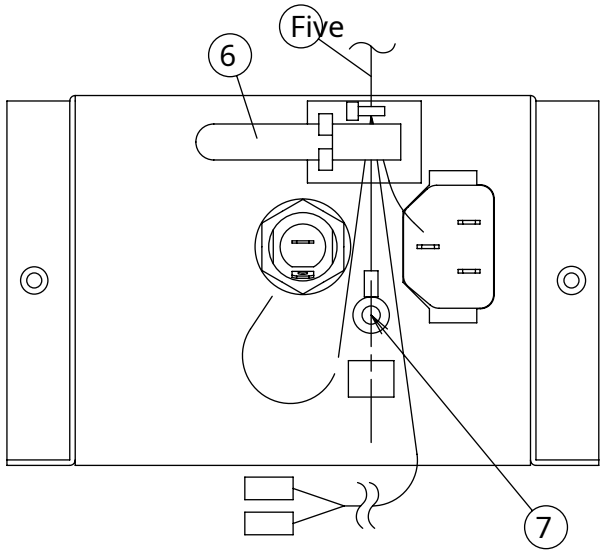

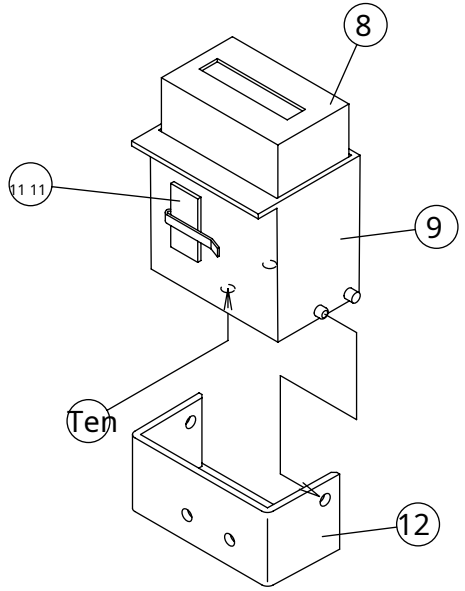

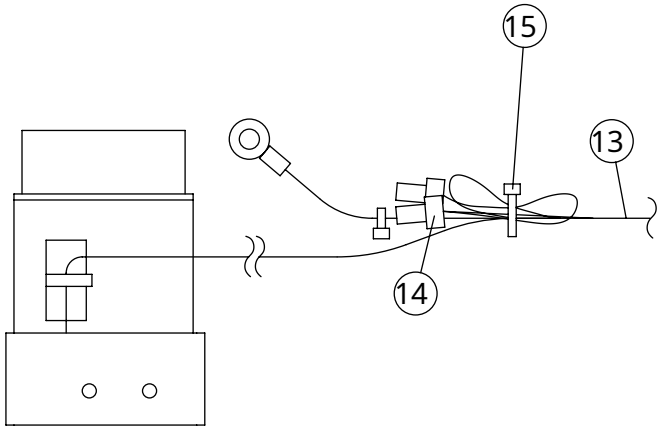

CAB

PARTS LIST

No.	PARTS No.	PARTS LIST	QTY
1	E3019430B SWITCH BOX		1
2	C0551019P AC INLET- (ROHS) C0550C4479-F4J8	NC4479-F4J8	1
3	HOLDER-(ROHS) C1600167P FUSE- (8A 250V)	M2526 (ROHS)	1
4	(6.3X31.75)-(PBF) MGC 8A / 250V L9006019A AC		1
5	HARNESS		1
6		UL CRAMPA TC-17 (UL-13G)	1
7		FLANGE NUT- (Trivalent) M4	1
8	C1700054L COUNTER- (DC 5V)-(ROHS)		1
9	NX-06R054-MY8K F9007600A COUNTER COVER		1
10		PAN HD SEMUTH SCREW-S- (Trivalent)	2
11		M3X6 PETTEPLE JFW-5 (SD10)	1
12	F9007601A COUNTER HOLDER		1
13	L9006464A CABINET HARNESS		1
14		TERMINAL & CONNECTOR-S- (12A) CE-2	2
15		CONVEX- (CV-100) (milky white) CV-100K	1
16			
17			
18			
19			
20			
21			
22			
23			
24			
25			

HARD CANDY
WWW.HARD--CANDY.COM キャンディ

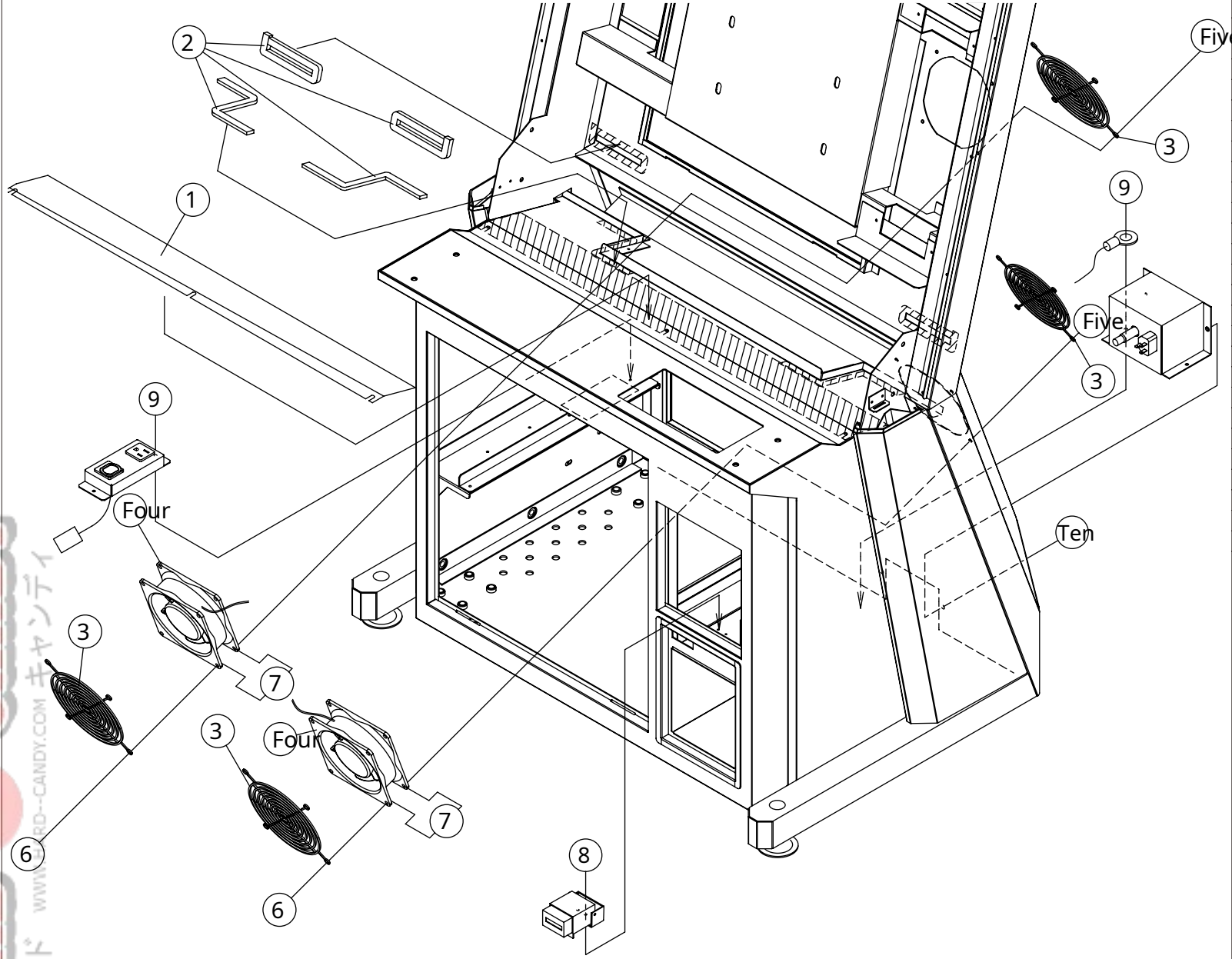

PARTS LIST			
No.	PARTS No.	PARTS LIST	QTY
1	F9007075A	SHEET-A	1
2	F9007069B	DUCT SPONGE 230X10X5 E5000689A	Four
3	120MM FAN GUARD-(ROHS) C1200619P	DC	Four
4	BRUSHLESS FAN-(12V)-(ROHS) A12038L12B		2
5		TRUSS HD SCREW- <CHROME> M4X50	8
6		SELF LOCKING NUT-U- (Trivalent) M4	8
7	F9008174B	PLASTIC SPACER ZB / 4X8X27	8
8		PAN HD SEMUTH SCREW-W- (Trivalent) M3X8	2
9		PAN HD SEMUTH SCREW-W- (Trivalent) M4X8	Four
10		TRUSS HD SCREW- (CHROME) M4X8	2
11			
12			
13			
14			
15			
16			
17			
18			
19			
20			
21			
22			
23			
24			
25			

CAB

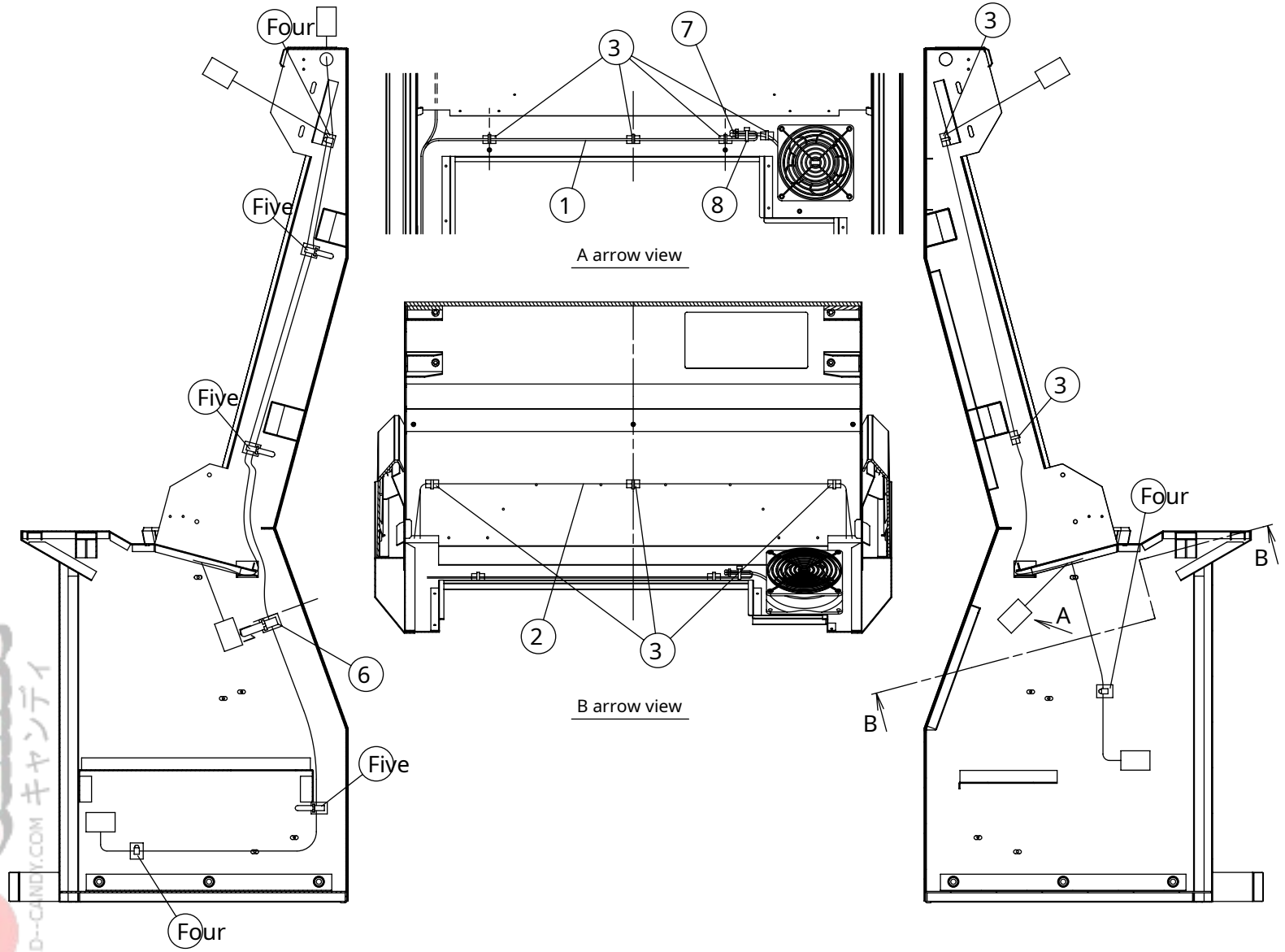

PARTS LIST			
No.	PARTS No.	PARTS LIST	QTY
1	L9006463A	CABINET DC HARNESS 2	1
2	L9005616D	SPEAKER HARNESS	1
3		PETTEPLE JFW-5 (SD10)	9
4		DK CRAMP TS-0607 (DKN-5G) UL	3
5		CRAMP ATC-17 (UL-13G) UL CRAMP	3
6		ATC-22 (UL-18G) TERMINAL &	1
7		CONNECTOR-S- (12A) CE-2 CONVEX-	2
8		(milky white) CV-100K (SKB-100)	1
9			
10			
11			
12			
13			
14			
15			
16			
17			
18			
19			
20			
21			
22			
23			
24			
25			

CAB

HARD CANDY ハードキャンディ WWW.HARD-CANDY.COM

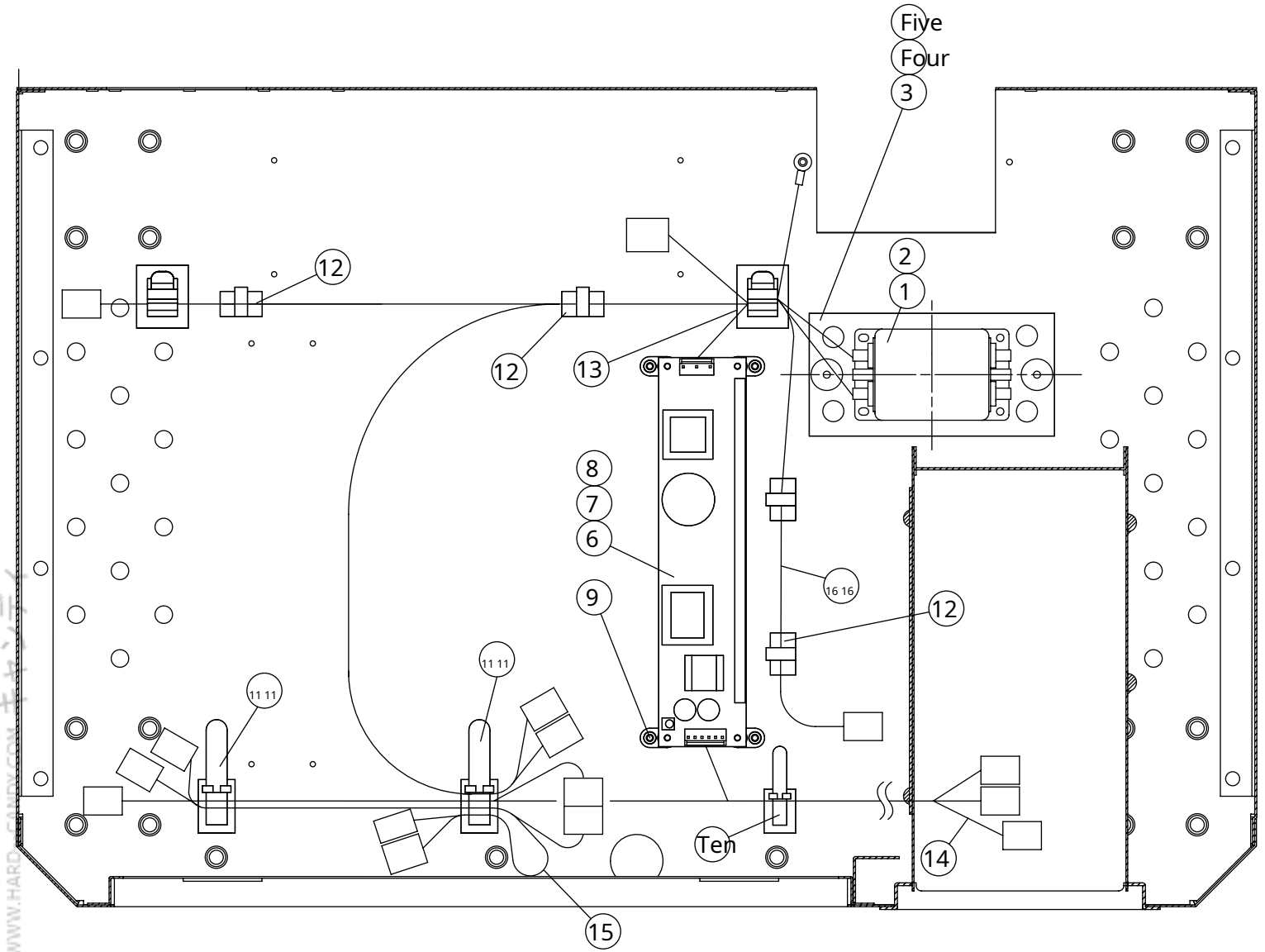

PARTS LIST

No.	PARTS No.	PARTS LIST	QTY
1	C1800081P	NOISE FILTER-(250V 10A) -(ROHS) SUP-ET10-ER-0	1
2		BIND HD SELF TAP- (Trivalent)	Four
3	3.5X12-1 D2002015A	NOISE FILTER BASE	1
4		PLAIN WASHER- (Trivalent) 4.5X18X1.6T PAN HD	2
5		SEMUTH SCREW-W- (Trivalent) M4X25	2
6	M1300079A	SWITCHING REGULATOR -(ROHS) VS75B-12 (HFP)	1
7	F9006850A	RES LOCK LCM3-20	Four
8		PAN HD SEMUTH SCREW-W- (Trivalent) M3X8	Four
9		BIND HD SCREW- (Trivalent) M3X8 UL	Four
10		CRAMP ZB / ATC-17 (UL-13) UL CRAMP	1
11		ZB / ATC-22 (UL-18) PETTEPLE JFW-5	2
12		(SD10))	3
13		DK CRAMP TS-1214 (DKN-10G)	1
14	L9005607C	DC HARNESS	1
15	L9005609B	JVS HARNESS	1
16	L9006013A ELEC	AC HARNESS	1
17			
18			
19			
20			
21			
22			
23			
24			
25			

HARD CANDY WWW.HARD-CANDY.COM ハードキャンディ

CAB

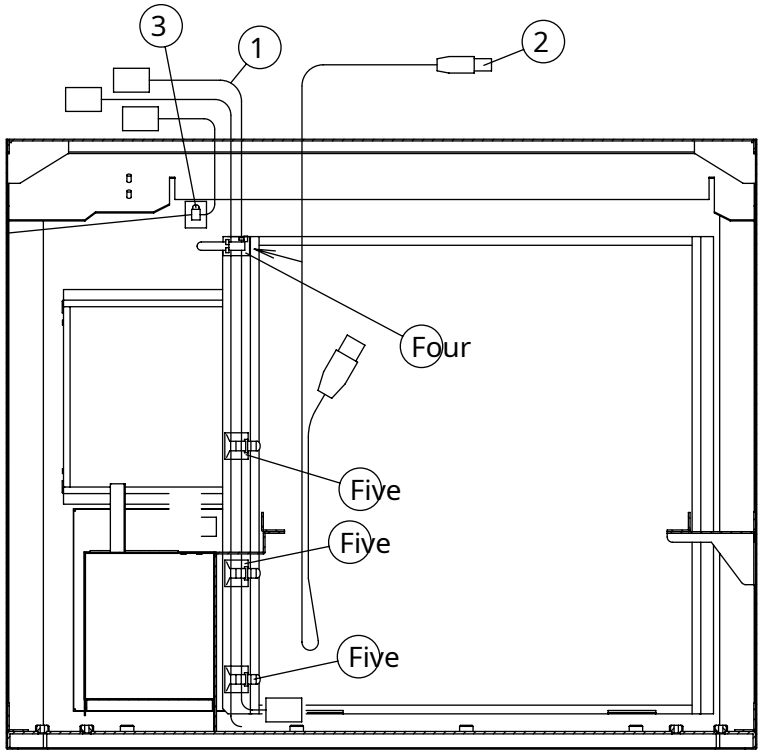

CAB

PARTS LIST			
No.	PARTS No.	PARTS LIST	QTY
1	L9005604B CAB	INET AC HARNESS L9005617A	1
2		USB CABLE-(AB)-(1.0M)	1
3		DK CRAMP TS-0607 (DKN-5G)	Five
4		UL CRAMP ATC-17 (UL-13)	2
5		TL CRAMP TL-18A	3
6			
7			
8			
9			
10			
11			
12			
13			
14			
15			
16			
17			
18			
19			
20			
21			
22			
23			
24			
25			

HARD CANDY ハードキャンディ WWW.HARD-CANDY.COM